SR7000G

SERVICE MANUAL

REFERENCE *No.*

DATE : JANUARY 21, 1982

marantz® JAPAN, INC.

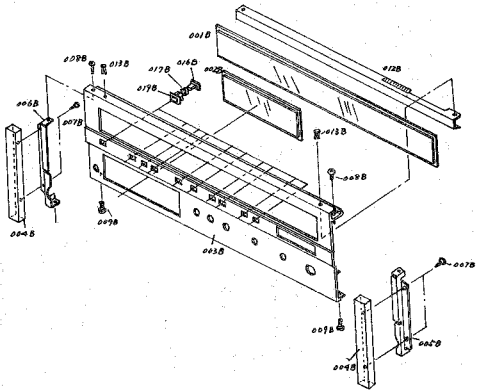
0018
0098
0138
0178
0168
0128
0068
0078
0048
0088

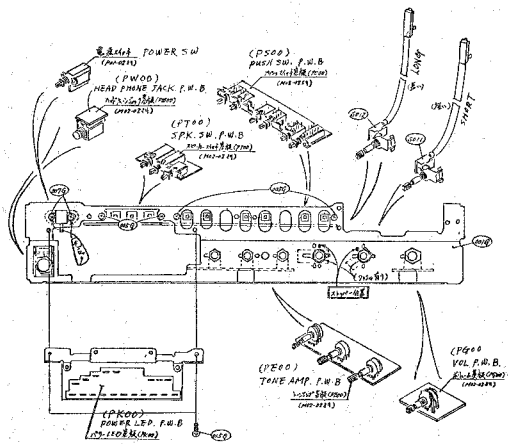
(PW00)
(PS00)
(PT00)
(PE00)
(PK00)
(PG00)

009G
007H
001H

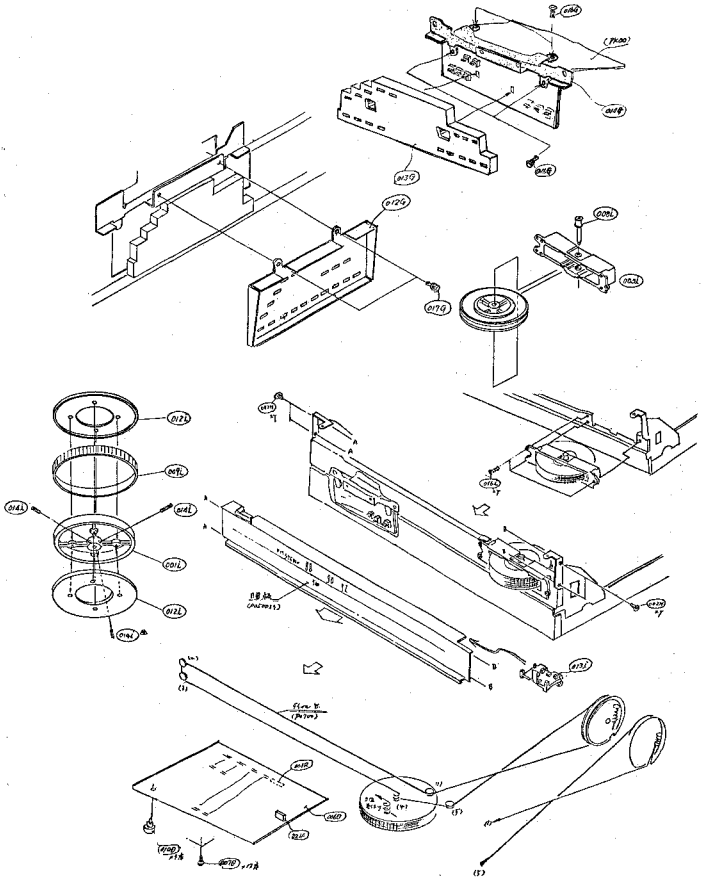

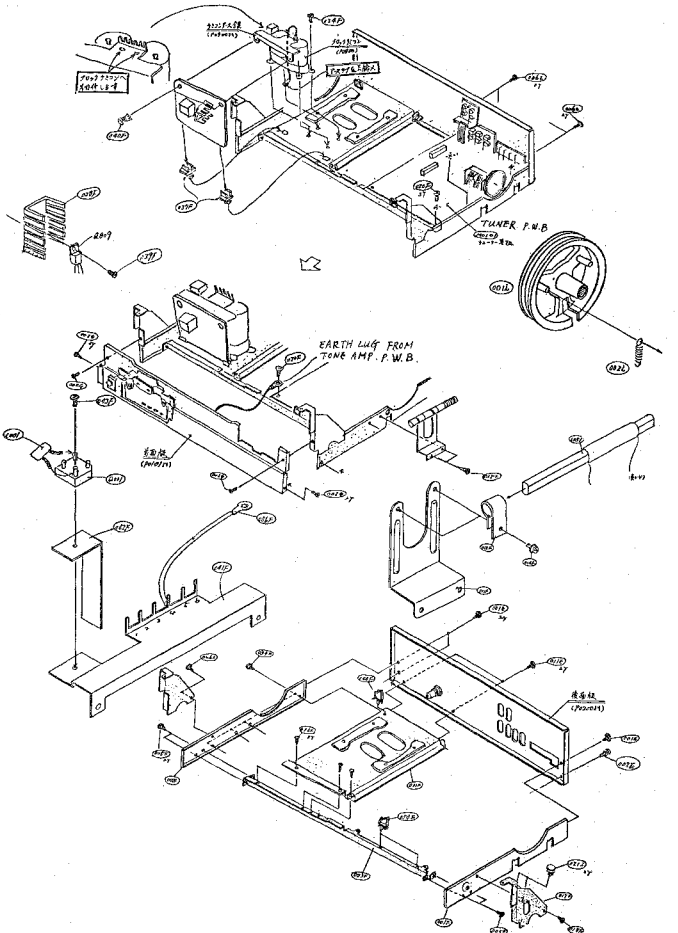
TUNER P.W.B.
EARTH LUG FROM TONE AMP. P.W.B.

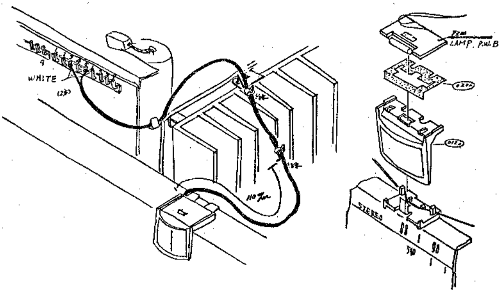

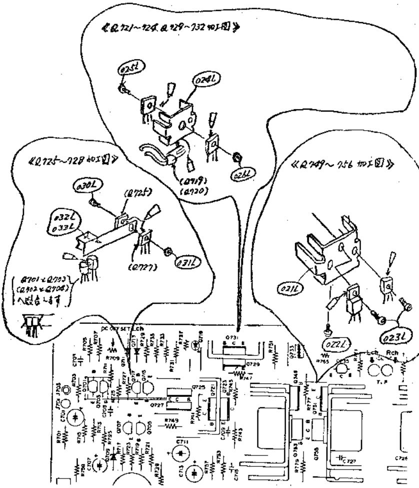

(P700) MAIN AMP P.W. BOARD

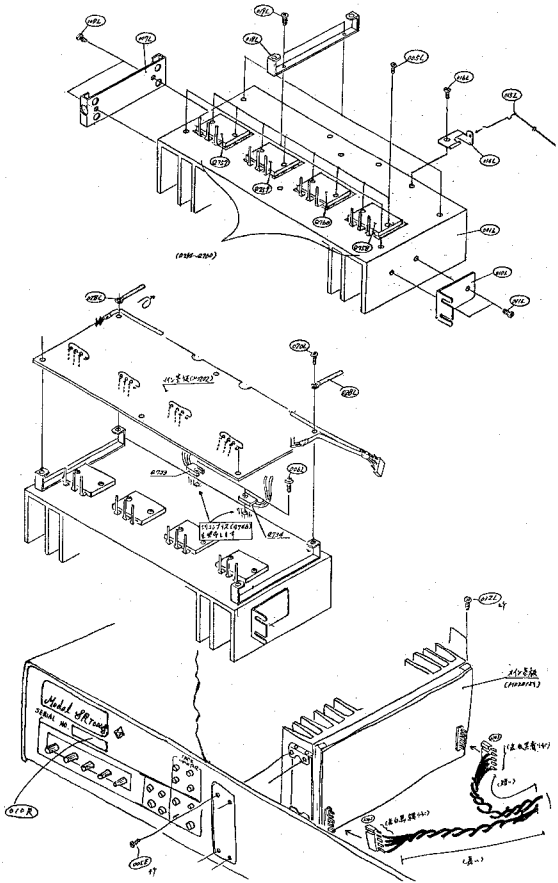

改版	シンボル	部品番号	SR7000GP	SR7000GPE	備考	手配	設変
1	002S	2112809014	1	1	クッション(前)	—	18
1	003S	2112809022	1	1	〃 (後)	—	18
	004S	2918107260	1	1	シート(セット用)		
2	005S	9090909030	1	1	ポリシート	—	13
	007S	101H801112	1	1	PKGケース		
	017S	2918107380	1	1	シート(ACコード用)		
	901V	YJ04000240	1	1	ソケット		
	001V	ZA02000070	1	1	FM ANT		
3	020S	2819056020	1	1	ANT用ブッカ	12.13	14
	006S	9526019050	3		シリアルNo (電圧ラベル不要)		
	008S	2713813012	1		封筒		
	009S	2818854013	1		保証書		
	010S	101H851310	1		インスト		
	012S	101H851020	1		スペック		
	015S	9630000180	1		IBMカード		
	024S	9650000014	1		SSカード		
	110S	101H118010	1		紙板(フライホイール用)		
	006S	9526019060		2	シリアルNo (220V AC)		
	009S	2731821013		1	シリカゲル		
	010S	101H851310		1	インスト		
	012S	101H8513-0		1	スペック		10

印刷物準備

・下記シンボル順に揃えて、ポリ袋へ挿入し口をウラ側へ折曲げ、セロテープで止めます(下表の最上欄のものを一番上にし記入順に従って揃えます)

SR7000GP		SR7000GPE	
012S	スペック	012S	スペック
010S	インスト	010S	インスト
009S	保証書	001V	FM ANT
015S	IBMカード		
008S	封筒		
024S	SSカード		
001V	FM ANT		

(上) ↓ (下)

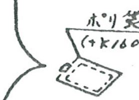

SR7000GPのIBMカード(015S)にはモデル名を黒で捺印後、封筒(008S)へ入れます

ポリシート入れ及びセット入れ作業

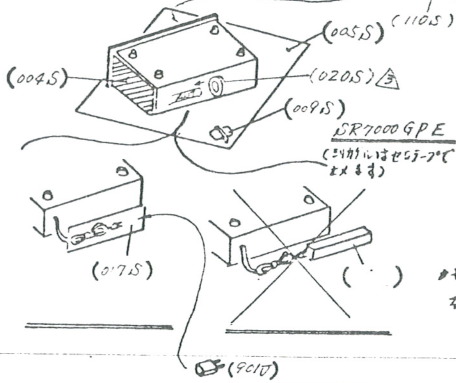

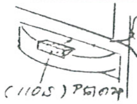

附属品を外側にし、側面側へ入れる
SR7000GPはセロテープで上面に十字に貼り付ける

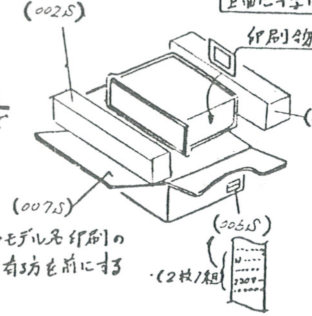

・モデル名印刷の有る方を前にする

上面はステッチー止メ4ヶ所
(SR7000GPは除く)

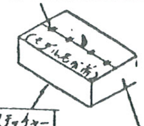

下面はステッチャー8ヶ所止メ
[10Kg以下4ヶ所
〃 を超すものは8ヶ所]

~~品安規承認後 Ⓢ Ⓥ Ⓓ Ⓕ 等を赤で捺印する(両面)~~

SR7000GPは電圧ラベルは不要です

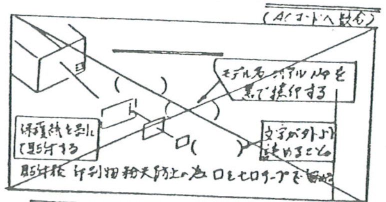

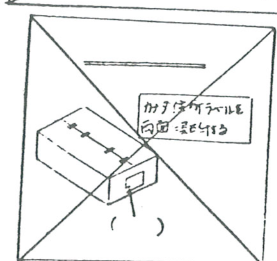

SR7000GP

梱包後ゆすっても音がしないこと

・上下面とも、パックテープでH型に貼る (+HZ7600P)
・下面はステープラー後貼付する

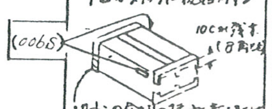

・カートンの合せ目のステープラー部に貼付

No	線種	色	加工番号	使用個所

改版 ① 81-9-16
(002S) 3 → 4枚
(003S) 0 → 2枚) 1840T〜 山下 土口

③ 81-4-8
・ANT用ブッフィ 追加
1240T〜 (sign.)

適用モデル(仕向): SR7000GPE / SR7000GP

発行	作業名	梱包			
81-9-18	作成日	80-11-20	担当 (sign.)	承認 (sign.)	
生技課	作業指図書				1/1

MARANTZ JAPAN, INC.　作業コード 1014 H0100

80-10-1500S

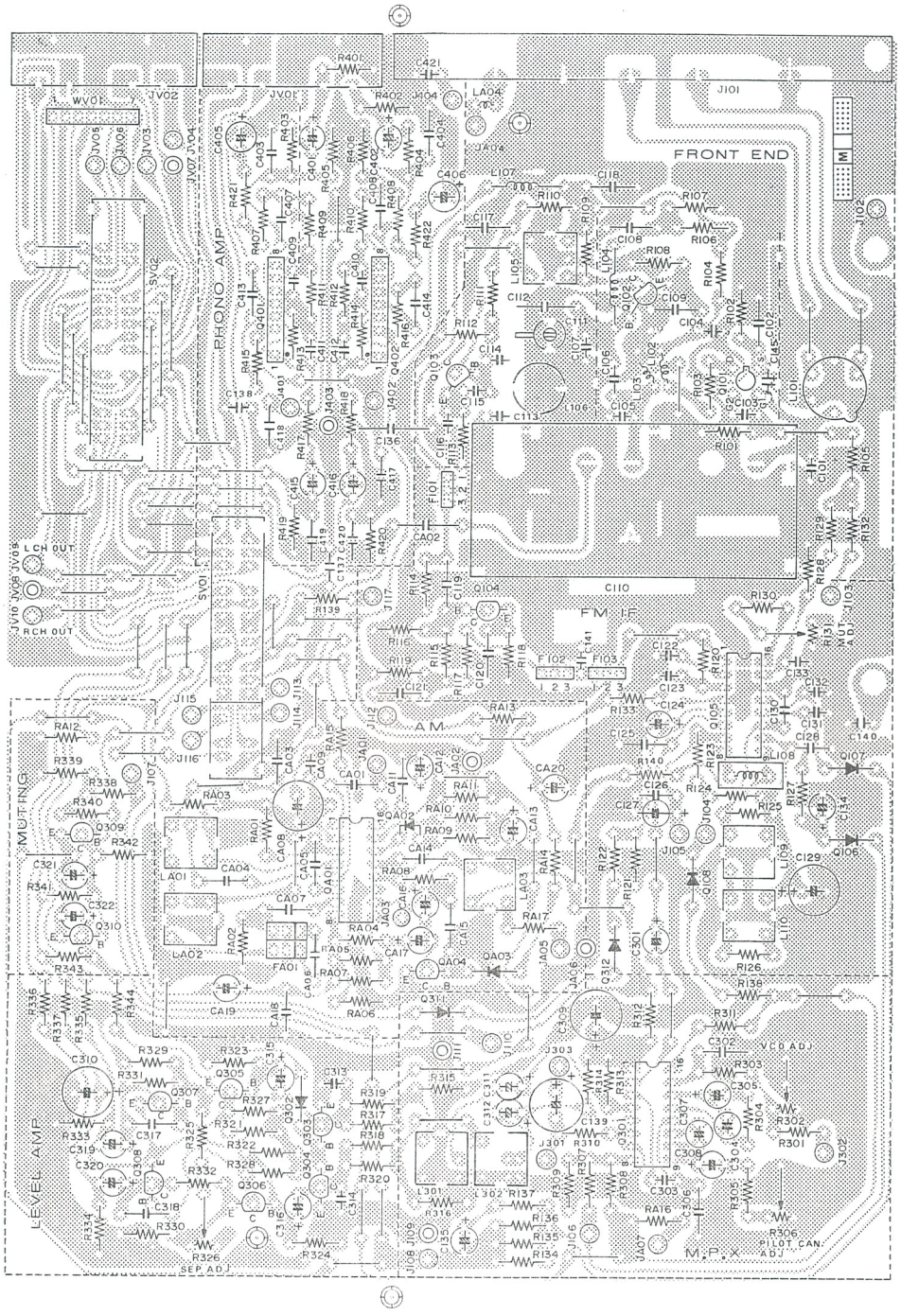

(P100) YK2116171-2. TUNER & PHONO P. W. Board.

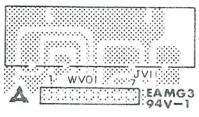

(PV00) YK2116172-0

TAPE 1 IN/OUT P. W. Board,

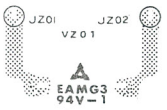

(PZ00) YK2116173-0

DIAL POINTER LAMP P. W. Board.

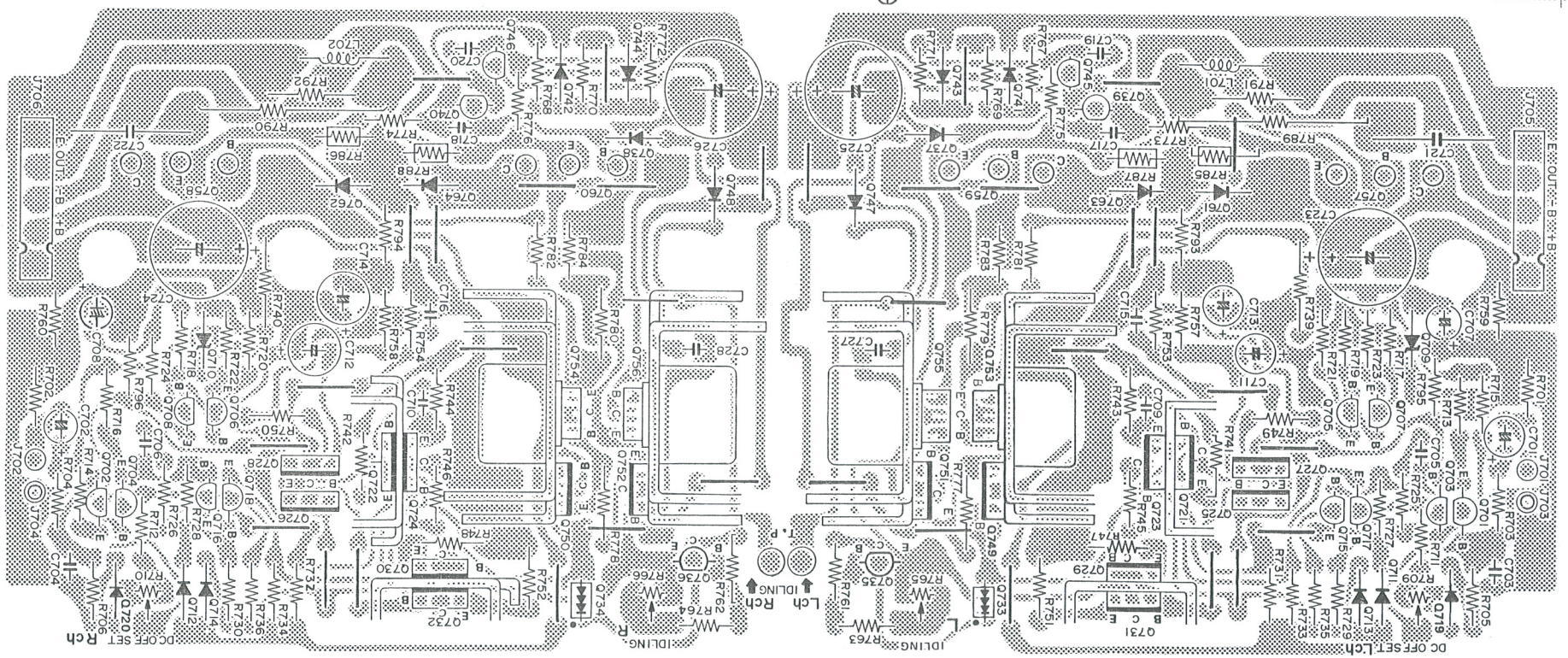

(P700) WK101H10A-2 MAIN AMP. P. W. Board.

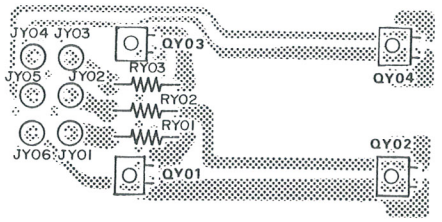

(PY00) WK101H00I-0

POWER & SPK IND. P. W. Board.

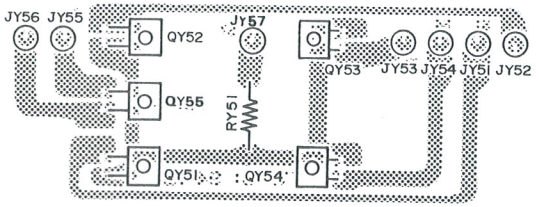

(PY50) WK101H00H-0

FUNCTION IND. P. W. Board.

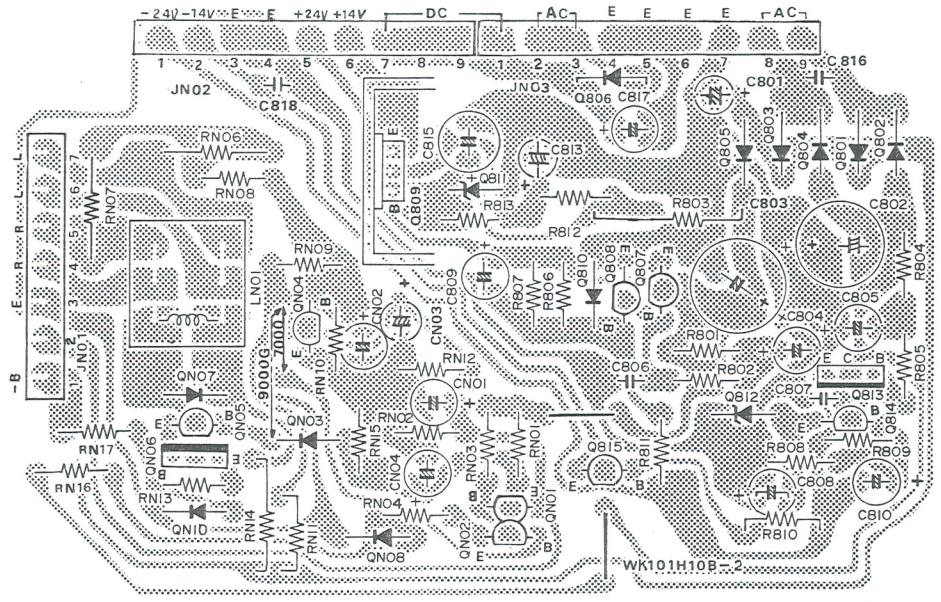

(P800) WK101H00B-2 POWER SUPPLY P. W. Board.

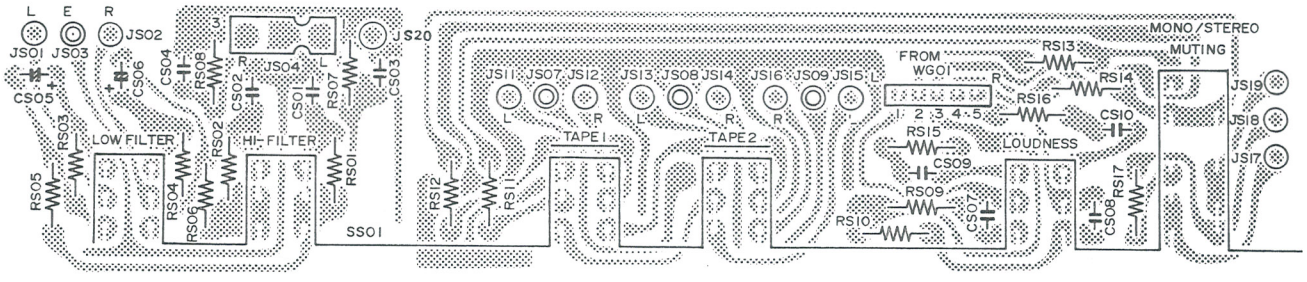

(PS00) WK101H00C-0, SWTCH P. W. Board.

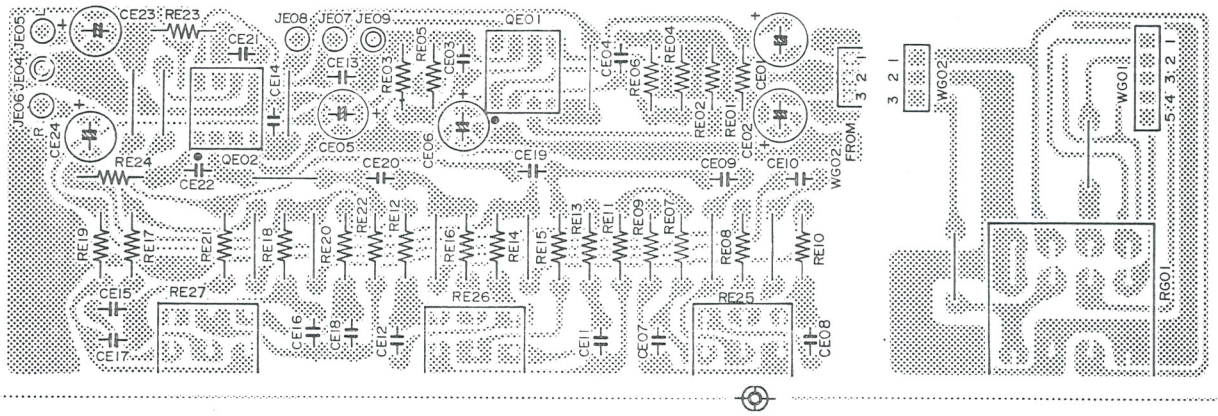

(PE00) WK101H00E-0, TONE AMP. P. W. Board,

(PG00) WK101H00D-0
VOLUME P. W. Board

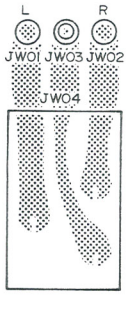

(PW00) WK101H00F-0
PHONE JACK P. W. Board.

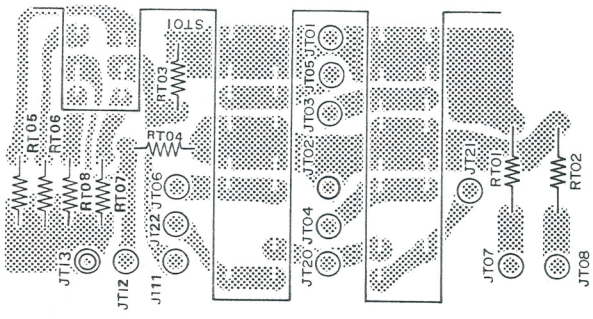

(PT00) WK101H00G-0.
SPK SWITCH P. W. Board,

ASSEMBLY PARTS LIST

REF. DESIG.	Q'TY E	Q'TY P	PART NO.	DESCRIPTION
A	1	1	101H063400	Front Panel Assembly
)01B	1	1	2112158110	Window
)02B	1	1	2112158120	Window
)03B	1	1	101H063010	Escutcheon
)04B	2	2	2112063140	Escutcheon, Side Wood
)05B	1	1	2112160020	Bracket
)06B	1	1	2112160030	Bracket
)07B	4	4	514003104O	B.H.Tap. Screw
)08B	2	2	5128030880	B.H.Tap. Screw
)12B	1	1	2112303212	Mask
)13B	2	2	2276005050	Clamper
)19B			2112259033	Bush
B	1	1	2219273410	Flywheel Assembly
)01I	1	1	2219273015	Flywheel
)09I	1	1	2215353010	Ring
)12I	2	2	2219063230	Escutcheon
)14I	2	2	5169030609	Socket Screw,HP
F100	1	1	YK21161712	P.W.B. Tuner & Phono
	1	1	ZZ21168710	P.W.Board Assembly
F700	1	1	WK101H10A0	P.W.B. Main Amp.
	1	1	ZZ101H10A0	P.W.Board Assembly
F800	1	1	WK101H00B0	P.W.B. Power Supply
	1	1	ZZ101H00B0	P.W.Board Assembly
FE00	1	1	WK101H00E0	P.W.B. Tone Amp.
	1	1	ZZ21161850	P.W.Board Assembly
FG00	1	1	WK101H00D0	P.W.B. Volume
	1	1	ZZ21161870	P.W.Board Assembly
FK00	1	1	WF101H0010	P.W.B. LED Meter
	1	1	ZZ101H0010	P.W.Board Assembly
FS00	1	1	WK101H00C0	P.W.B. Switch
	1	1	ZZ21161860	P.W.Board Assembly
FT00	1	1	WK101H00G0	P.W.B. SPK Switch
	1	1	ZZ101H00G0	P.W.Board Assembly
FV00	1	1	YK21161720	P.W.B. Tape 1 In/Out
	1	1	ZZ21161720	P.W.Board Assembly

REF. DESIG.	Q'TY E	Q'TY P	PART NO.	DESCRIPTION
FW00	1	1	WK101H00F0	P.W.B. Phone Jack
	1	1	ZZ21161840	P.W.Board Assembly
FY00	1	1	WK101H00I0	P.W.B. Power & SPK Ind.
	1	1	ZZ101H00I0	P.W.Board Assembly
FY50	1	1	WK101H00H0	P.W.B. Function Ind.
	1	1	ZZ101H00H0	P.W.Board Assembly
FZ00	1	1	YK21161730	P.W.B. Dial Pointer Lamp
	1	1	ZZ21161730	P.W.Board Assembly

ORDER MASTER PART (SUMMARY) LIST

LIST-NO. T-020 *ORDER 101H
PRG-NO.(TIC65S)

*ITEM H *ORDER 101H *BRAND MZ *ORDER-NAME SR7030G *REGISTER-DATE 79-12-12 ISSUE81-11-24 PAGE 2 (65)

--M-SPEC	BLOCK-NO SL	BLOCK-NO SL	BLOCK-NO SL	BLOCK-NO SL	BLOCK-NO SL	BLOCK-NO SL	BLOCK-NO SL	BLOCK-NO SL	REGISTER DATE
P000000000	HHPA1300(00)	HLMA2500(00)	HLMA4700(00)	HLMA4800(00)	HLMA4900(00)	HMAA4800(00)	HPSA5000(00)	HSWA6600(00)	
	HSWA6700(00)	HSWA6701(14)	HTEA0700(00)	HTGA3100(00)	HTUA1200(00)	HTUA1205(00)	HVRA1700(00)	101HAP00(00)	
	101HAZ00(00)	101HBP00(00)	101HEP00(00)	101HFA00(00)	101HGA00(00)	101HHA00(00)	101HIB00(00)	101HLA00(00)	
	101HSP00(00)	101HWP00(00)	2112IA00(00)	2112RN00(08)	2116DP00(01)	2213VA01(00)	2215VA00(00)		
						*MODEL-NAME MODEL NO.SR7000G			
P000000002	HHPA1300(00)	HLMA2500(00)	HLMA4700(00)	HLMA4800(00)	HLMA4900(00)	HMAA4800(00)	HPSA5000(00)	HSWA6600(00)	
	HSWA6700(00)	HSWA6701(14)	HTEA0700(00)	HTGA3100(00)	HTUA1200(00)	HTUA1205(00)	HVRA1700(00)	101HAE00(00)	
	101HAZ00(00)	101HBP00(00)	101HEP00(00)	101HFA00(00)	101HGA00(00)	101HHA00(00)	101HIB00(00)	101HLA00(00)	
	101HSE00(00)	101HWE00(00)	2112IA00(00)	2112RN00(08)	2116DP00(00)	2213VA01(00)	2215VA00(00)		
						*MODEL-NAME MODEL NO.SR7000G			

TOTAL 0002

ENGINEERING PART LIST

ITEM	H	ORDER	101H	BRAND	MZ	ORDER NAME	SR7000G	REGISTER DATE	79-12
BLOCK NO.	HHPA1300		DESCRIPTION	0 HEADPHONE ASSY					PAGE

M-SPEC (SL) QTY

P000000001(00)	P000000002(00)		

FA GD	LOT	ODN CCS	SYM.NO.	PART CODE	Q T Y	K T S	PART NAME / NOTICE
	00	M	JW04	YJ01001340	1		JACK PHONE JACK
	00	XMN	PW00	WK101H00F0	1	52.06.	P.W. BOARD PHONE JACK ASSY. P.W.B. (94HB)
		SYN-CNT		2			

ENGINEERING PART LIST

ITEM	H	ORDER	101H	BRAND	MZ	ORDER NAME	SR7000G	REGISTER DATE	79-12
BLOCK NO.	HLMA2500	DESCRIPTION	Q DIAL POINTER LAMP ASSY						PAGE

M-SPEC (SL) QTY

P000000000(00)	P000000002(00)		

FA GD	LOT	ODN COS	SYM.NO.	PART CODE	Q T Y	K T S	PART NAME / NOTICE
	00	XMN	PZ00	YK21161730	1	51.03.	P.W. BOARD
	00	M	VZ01	IN10080530	1		LAMP 8V .55MA
		SYM-CNT		2			

ENGINEERING PART LIST

ITEM	H	ORDER	101H	BRAND	MZ	ORDER NAME	SR7000G	REGISTER DATE	79-12
BLOCK NO.	HLMA4700	DESCRIPTION	0 POWER & TUNING METER (LED) ASSY.						PAGE

M-SPEC (SL) QTY

P000000000(00)	P000000002(00)		

FA GD	LOT	ODN CCS	SYM.NO.	PART CODE	Q T Y	K T S	PART NAME / NOTICE
	00	M	CK01	EA47505030	1		ELECT CAP 4.7 UF 50V
	00	M	CK02	EA47505030	1		ELECT CAP 4.7 UF 50V
	00	M	CK03	EA10505030	1		ELECT CAP 1 UF 50V
	00	M	CK04	EA10505030	1		ELECT CAP 1 UF 50V
	00	M	CK05	EA47505030	1		ELECT CAP 4.7 UF 50V
	00	M	CK06	EA47505030	1		ELECT CAP 4.7 UF 50V
	00	M	CK31	DF16102300	1		FILM CAP. 1000PF K 50V
	00	M	CK32	EA33505030	1		ELECT CAP 3.3 UF 50V
	00	M	CK33	EA33505030	1		ELECT CAP 3.3 UF 50V
	00	M	CK34	EA10701630	1		ELECT CAP 100 UF 16V
	00	MN	PK00	WF101H0010	1		P.W. BOARD LED METER ASSY P.W.B. (94H8)
	00	MN	QK01	HC10045030	1		IC LB1409 (POWER LED DRIVER IC)
	00	MN	QK02	HC10045030	1		IC LB1409 (POWER LED DRIVER IC)
	00	MN	QK03	HI10012030	1		L.E.D. SLP154B (RED)
	00	MN	QK04	HI10012030	1		L.E.D. SLP154B (RED)
	00	MN	QK05	HI10013030	1		L.E.D. SLP254B (GREEN)
	00	MN	QK06	HI10013030	1		L.E.D. SLP254B (GREEN)
	00	MN	QK07	HI10013030	1		L.E.D. SLP254B (GREEN)
	00	MN	QK08	HI10013030	1		L.E.D. SLP254B (GREEN)
	00	MN	QK09	HI10013030	1		L.E.D. SLP254B (GREEN)

ENGINEERING PART LIST

ITEM	H	ORDER	101H	BRAND	MZ	ORDER NAME	SR7000G	REGISTER DATE	79-12
BLOCK NO.	HLMA4700	DESCRIPTION	0 POWER & TUNING METER (LED) ASSY.					PAGE	

M-SPEC (SL) QTY

P000000000(00)	P000000002(00)			

FA GD	LOT	ODN CCS	SYM.NO.	PART CODE	Q T Y	K T S	PART NAME / NOTICE
	00	MN	QK10	HI10013030	1		L.E.D. SLP254B (GREEN)
	00	MN	QK11	HI10013030	1		L.E.D. SLP254B (GREEN)
	00	MN	QK12	HI10013030	1		L.E.D. SLP254B (GREEN)
	00	MN	QK13	HI10013030	1		L.E.D. SLP254B (GREEN)
	00	M	QK30	HC10040030	1		IC LB1416 (SIGNAL LED DRIVER IC)
	00	MN	QK31	HI10013030	1		L.E.D. SLP254B (GREEN)
	00	MN	QK32	HI10013030	1		L.E.D. SLP254B (GREEN)
	00	MN	QK33	HI10012030	1		L.E.D. SLP154B (RED)
	00	MN	QK34	HI10012030	1		L.E.D. SLP154B (RED)
	00	MN	QK35	HI10012030	1		L.E.D. SLP154B (RED)
	00	M	QK50	HT309452A0	1		TRANSISTOR 2SC945 (Q,R)
	00	M	QK51	HT107332A0	1		TRANSISTOR 2SA733 (Q,R)
	00	M	QK52	HT309452A0	1		TRANSISTOR 2SC945 (Q,R)
	02	M	QK53	HD30033090	1		ZENER WZ052
	00	MN	QK54	HI10012030	1		L.E.D. SLP154B (RED)
	00	MN	QK55	HI10013030	1		L.E.D. SLP254B (GREEN)
	00	MN	QK56	HI10012030	1		L.E.D. SLP154B (RED)
	18	M	RK01	RA01030800	1		TRIMMING RESIST 10K OHM TRIMING RESIST
	18	M	RK02	RA01030800	1		TRIMMING RESIST 10K OHM TRIMING RESIST
	00	M	RK03	GD05223140	1		RESISTOR 22K OHM J 1/4W

ENGINEERING PART LIST

ITEM	H	ORDER	101H	BRAND	MZ	ORDER NAME	SR7000G	REGISTER DATE	79-12
BLOCK NO.	HLMA4700	DESCRIPTION	O POWER & TUNING METER (LED) ASSY.						PAGE

M-SPEC (SL) QTY

P000000000(00)	P000000002(00)		

FA GD	LOT	ODN CCS	SYM.NO.	PART CODE	Q T Y	K T S	PART NAME / NOTICE
	00	M	RK04	GD05223140	1		RESISTOR 22K OHM J 1/4W
	00	M	RK05	GD05223140	1		RESISTOR 22K OHM J 1/4W
	00	M	RK06	GD05223140	1		RESISTOR 22K OHM J 1/4W
	00	M	RK07	GD05103140	1		RESISTOR 10K OHM J 1/4W
	00	M	RK08	GD05103140	1		RESISTOR 10K OHM J 1/4W
	18	M	RK09	RA01020800	1		TRIMMING RESIST 1K OHM TRIMING RESIST
	18	M	RK10	RA01020800	1		TRIMMING RESIST 1K OHM TRIMING RESIST
	00	M	RK11	GD05823140	1		RESISTOR 82K OHM J 1/4W
	00	M	RK12	GD05823140	1		RESISTOR 82K OHM J 1/4W
	00	M	RK13	GD05183140	1		RESISTOR 18K OHM J 1/4W
	00	M	RK14	GD05183140	1		RESISTOR 18K OHM J 1/4W
	00	M	RK15	GD05223140	1		RESISTOR 22K OHM J 1/4W
	00	M	RK16	GD05223140	1		RESISTOR 22K OHM J 1/4W
	00	M	RK17	GD05102140	1		RESISTOR 1K OHM J 1/4W
	00	M	RK18	GD05102140	1		RESISTOR 1K OHM J 1/4W
	00	M	RK19	GD05271140	1		RESISTOR 270 OHM J 1/4W
	00	M	RK20	GD05271140	1		RESISTOR 270 OHM J 1/4W
	00	M	RK21	GD05271140	1		RESISTOR 270 OHM J 1/4W
	00	M	RK22	GD05271140	1		RESISTOR 270 OHM J 1/4W
	00	M	RK23	GD05271140	1		RESISTOR 270 OHM J 1/4W

ENGINEERING PART LIST

ITEM	H	ORDER	101H	BRAND	MZ	ORDER NAME	SR7000G	REGISTER DATE	79-12
BLOCK NO.	HLMA4700	DESCRIPTION	O POWER & TUNING METER (LED) ASSY.						PAGE

M-SPEC (SL) QTY

P000000000(00)	P000000002(00)		

FA GD	LOT	ODN OCS	SYMBO	PART CODE	Q T Y	K T S	PART NAME / NOTICE
	00	M	RK24	GD05271140	1		RESISTOR 270 OHM J 1/4W
	00	M	RK25	GD05271140	1		RESISTOR 270 OHM J 1/4W
	00	M	RK26	GD05271140	1		RESISTOR 270 OHM J 1/4W
	00	M	RK27	GD05271140	1		RESISTOR 270 OHM J 1/4W
	00	M	RK30	GD05153140	1		RESISTOR 15K OHM J 1/4W
	00	M	RK31	GD05682140	1		RESISTOR 6.8K OHM J 1/4W
	00	M	RK32	GD05103140	1		RESISTOR 10K OHM J 1/4W
	00	M	RK33	GD05562140	1		RESISTOR 5.6K OHM J 1/4W
	00	M	RK34	GD05683140	1		RESISTOR 68K OHM J 1/4W
	00	M	RK35	GD05100140	1		RESISTOR 10 OHM J 1/4W
	00	M	RK36	GD05100140	1		RESISTOR 10 OHM J 1/4W
	00	M	RK37	GD05331140	1		RESISTOR 330 OHM J 1/4W
	00	M	RK38	GD05331140	1		RESISTOR 330 OHM J 1/4W
	00	M	RK39	GD05331140	1		RESISTOR 330 OHM J 1/4W
	18	M	RK40	RA05030800	1		TRIMMING RESIST 50K OHM TRIMING RESIST
	00	M	RK50	GD05104140	1		RESISTOR 100K OHM J 1/4W
	00	M	RK51	GD05102140	1		RESISTOR 1K OHM J 1/4W
	00	M	RK52	GD05821140	1		RESISTOR 820 OHM J 1/4W
	00	M	RK53	GD05102140	1		RESISTOR 1K OHM J 1/4W
	03	M	RK54	GD05183140	1		RESISTOR 18KOHM J 0.25W

ENGINEERING PART LIST

ITEM	H	ORDER	101H	BRAND	MZ	ORDER NAME	SR7000G	REGISTER DATE	79-12
BLOCK NO.	HLMA4700		DESCRIPTION		0 POWER & TUNING METER (LED) ASSY.			PAGE	

P000000000(00)	P000000002(00)	M-SPEC (SL) QTY	

FA GD	LOT	ODN CCS	SYM NO.	PART CODE	Q T Y	K T S	PART NAME / NOTICE
	00	M	RK55	GD05102140	1		RESISTOR 1K OHM J 1/4W
	04	N	RK56	GD05820140	1		RESISTOR 82 OHM J 0.25W
		SYM-CNT		82			

ENGINEERING PART LIST

ITEM	H	ORDER	101H	BRAND	MZ	ORDER NAME	SR7000G	REGISTER DATE	79-12
BLOCK NO.	HLMA4800	DESCRIPTION	Q POWER,PROTECTOR & SPK IND. ASSY.					PAGE	

P000000000(00)	P000000002(00)	M-SPEC (SL) QTY

FA GD	LOT	ODN OCS	SYM.NO.	PART CODE	Q T Y	K T S	PART NAME / NOTICE
	00	XMN	PY00	WK101H0010	1	52.09.	P.W. BOARD POWER & SPK IND. P.W.B, (S4HB)
	00	M	QY01	HI10009020	1		L.E.D. CN26RP LCF (SYSTEM-1)
	00	M	QY02	HI10009020	1		L.E.D. CN26RP LCF (SYSTEM-2)
	00	M	QY03	HI10009020	1		L.E.D. CN26RP LCF (POWER)
	00	M	QY04	HI10009020	1		L.E.D. CN26RP LCF (PROTECTOR)
	00	M	RY01	GD05681141	1		RESISTOR 680 OHM J 1/4W
	00	M	RY02	GD05681141	1		RESISTOR 680 OHM J 1/4W
	00	M	RY03	GD05681141	1		RESISTOR 680 OHM J 1/4W
		SYM-CNT		8			

ENGINEERING PART LIST

ITEM	H	ORDER	101H	BRAND	MZ	ORDER NAME	SR7000G	REGISTER DATE	79-12
BLOCK NO.	HLMA4900		DESCRIPTION	O FUNCTION IND. ASSY					PAGE

P000000000(00)	P000000002(00)	M-SPEC (SL) QTY

FA GD	LOT	ODN CCS	SYM.NO.	PART CODE	Q T Y	K T S	PART NAME / NOTICE
	00	XMN	PY50	WK101H00H0	1	52.08.	P.W. BOARD FUNCTION IND. ASSY. PWB (94HB)
	00	M	QY51	HII0009020	1		L.E.D. CN26RP LCF (AM)
	00	M	QY52	HII0009020	1		L.E.D. CN26RP LCF (FM)
	00	M	QY53	HII0009020	1		L.E.D. CN26RP LCF (PHONO)
	00	M	QY54	HII0009020	1		L.E.D. CN26RP LCF (AUX)
	00	M	QY55	HII0009020	1		L.E.D. CN26RP LCF (FM STEREO)
	00	M	RY51	GD05561141	1		RESISTOR 560 OHM J 1/4W
		SYM-CNT		7			

ENGINEERING PART LIST

ITEM	H	ORDER	101H	BRAND	MZ	ORDER NAME	SR7000G	REGISTER DATE	79-12
BLOCK NO.	HMAA4800	DESCRIPTION	0 MAIN AMP ASSY					PAGE	

P000000000(00)	P000000002(00)		M-SPEC (SL) QTY

FA GD	LOT	ODN COS	SYM.NO.	PART CODE	Q T Y	K T S	PART NAME / NOTICE
	15	M	C701	EA47505030	1		ELECT CAP 4.7 UF M 50V
	15	M	C702	EA47505030	1		ELECT CAP 4.7 UF M 50V
	13	M	C703	DK16271301	1		CERAMIC CAP. 270 PF K 50V
	13	M	C704	DK16271301	1		CERAMIC CAP. 270 PF K 50V
	13	M	C705	DK16101301	1		CERAMIC CAP. 100 PF K 50V
	13	M	C706	DK16101301	1		CERAMIC CAP. 100 PF K 50V
	13	M	C707	EA10701631	1		ELECT CAP 100 UF M 16V
	13	M	C708	EA10701631	1		ELECT CAP 100 UF M 16V
	00	M	C709	DD15220550	1		CERAMIC CAP. 22 PF J 500V
	00	M	C710	DD15220550	1		CERAMIC CAP. 22 PF J 500V
	00	M	C711	EA33701030	1		ELECT CAP 330 UF M 10V
	00	M	C712	EA33701030	1		ELECT CAP 330 UF M 10V
	13	M	C713	EA10701031	1		ELECT CAP 100 UF M 16V
	13	M	C714	EA10701031	1		ELECT CAP 100 UF M 10V
	00	M	C715	DD11100550	1		CERAMIC CAP. 10 PF +-0.5P 500V
	00	M	C716	DD11100550	1		CERAMIC CAP. 10 PF +-0.5P 500V
	13	M	C717	DF16332301	1		FILM CAP. 3300 PF K 50V
	13	M	C718	DF16332301	1		FILM CAP. 3300 PF K 50V
	13	M	C719	DF16332301	1		FILM CAP. 3300 PF K 50V
	13	M	C720	DF16332301	1		FILM CAP. 3300 PF K 50V

ENGINEERING PART LIST

ITEM	H	ORDER	101H	BRAND	MZ	ORDER NAME	SR7000G	REGISTER DATE	79-12
BLOCK NO.	HMAA4800	DESCRIPTION	0 MAIN AMP ASSY						PAGE

M-SPEC (SL) QTY

P000000000(00)	P000000002(00)		

FA GD	LOT	ODN CCS	SYM.NO.	PART CODE	Q T Y	K T S	PART NAME / NOTICE
	00	M	C721	DF17104520	1		FILM CAP. 0.1 UF K 200V
	00	M	C722	DF17104520	1		FILM CAP. 0.1 UF K 200V
	00	M	C723	EA22710030	1		ELECT CAP 220 UF 100V
	00	M	C724	EA22710030	1		ELECT CAP 220 UF 100V
	00	M	C725	EA22710030	1		ELECT CAP 220 UF 100V
	00	M	C726	EA22710030	1		ELECT CAP 220UF 100V
	15	M	C727	DK16101550	1		CERAMIC CAP. 100 PF K 500V
	15	M	C728	DK16101550	1		CERAMIC CAP. 100 PF K 500V
	00	M	J704	YP06001050	1		PLUG 5P BASE POST
	00	M	J705	YP06001050	1		PLUG 5P BASE POST
	~~15~~	~~MN~~	~~K700~~	~~WK101H1002~~	~~1~~		~~P.W. BOARD P.W.B KIT~~
	~~14~~	~~MN~~	~~K701~~	~~WK1216190F0~~	~~1~~	~~50.~~	~~TRANSISTOR 2SA1216/2SC2922 (B,Y) PAIR~~
	~~14~~	~~MN~~	~~K702~~	~~WK1216190F0~~	~~1~~	~~50.~~	~~TRANSISTOR 2SA1216/2SC2922 (G,Y) PAIR~~
	~~15~~	~~M~~	~~K703~~	~~WK10111960~~	~~1~~	~~52.~~	~~TRANSISTOR 2SA1011/2SC2344 (B,E)~~
	~~15~~	~~M~~	~~K704~~	~~WK10111960~~	~~1~~	~~53.~~	~~TRANSISTOR 2SA1011/2SC2344 (G,E)~~
	00	M	L701	LL23915120	1		COIL COIL
	00	M	L702	LL23915120	1		COIL COIL
	15	XMN	P700	WK101H10A2	1		P.W. BOARD MAIN AMP P.W.B
	~~00~~	~~MN~~	~~P711~~	~~7506050IP0~~	~~10~~		~~JUMPER 5 MM JUMPER~~
	02	M	Q701	HT322401A0	1		TRANSISTOR 2SC2240(GR)

ENGINEERING PART LIST

ITEM	H	ORDER	101H	BRAND	MZ	ORDER NAME	SR7000G	REGISTER DATE	79-12
BLOCK NO.		HMAA4800		DESCRIPTION		0 MAIN AMP ASSY			PAGE

P000000000(00)	P000000002(00)	M-SPEC (SL) QTY

FA GD	LOT	ODN CCS	SYM.NO.	PART CODE	Q T Y	K T S	PART NAME / NOTICE
	02	M	Q702	HT322401A0	1		TRANSISTOR 2SC2240(GR)
	02	M	Q703	HT322401A0	1		TRANSISTOR 2SC2240(GR)
	02	M	Q704	HT322401A0	1		TRANSISTOR 2SC2240(GR)
	00	M	Q705	HT326342A0	1		TRANSISTOR 2SC2634 (R,S)
	00	M	Q706	HT326342A0	1		TRANSISTOR 2SC2634 (R,S)
	00	M	Q707	HT326342A0	1		TRANSISTOR 2SC2634 (R,S)
	00	M	Q708	HT326342A0	1		TRANSISTOR 2SC2634 (R,S)
	00	M	Q709	HD30025090	1		ZENER WZ-150
	00	M	Q710	HD30025090	1		ZENER WZ-150
	04	M	Q711	HD20001211	1		DIODE 1S2473C
	04	M	Q712	HD20001211	1		DIODE 1S2473C
	04	M	Q713	HD20001211	1		DIODE 1S2473C
	04	M	Q714	HD20001211	1		DIODE 1S2473C
	14	M	Q715	HT109922B0	1		TRANSISTOR 2SA992 (F,E)
	14	M	Q716	HT109922B0	1		TRANSISTOR 2SA992 (F,E)
	14	M	Q717	HT109922B0	1		TRANSISTOR 2SA992 (F,E)
	14	M	Q718	HT109922B0	1		TRANSISTOR 2SA992 (F,E)
	15	M	Q719	HV00003120	1		VARISTOR MV13
	15	M	Q720	HV00003120	1		VARISTOR MV13
	15	MN	Q721	HT11209280	1		TRANSISTOR 2SA1209 (S,T)

ENGINEERING PART LIST

ITEM	H	ORDER	101H	BRAND	MZ	ORDER NAME	SR7000G	REGISTER DATE	79-12
BLOCK NO.	HMAA4800	DESCRIPTION	0 MAIN AMP ASSY						PAGE

P000000000(00)	P000000002(00)		M-SPEC (SL) QTY	

FA QD	LOT	ODN OCS	SYM NO.	PART CODE	Q T Y	K T S	PART NAME / NOTICE
	15	MN	Q722	HT11209280	1		TRANSISTOR 2SA1209 (S,T)
	15	MN	Q723	HT11209280	1		TRANSISTOR 2SA1209 (S,T)
	15	MN	Q724	HT11209280	1		TRANSISTOR 2SA1209 (S,T)
	15	MN	Q725	HT11209280	1		TRANSISTOR 2SA1209 (S,T)
	15	MN	Q726	HT11209280	1		TRANSISTOR 2SA1209 (S,T)
	15	MN	Q727	HT11209280	1		TRANSISTOR 2SA1209 (S,T)
	15	MN	Q728	HT11209280	1		TRANSISTOR 2SA1209 (S,T)
	15	MN	Q729	HT32911280	1		TRANSISTOR 2SC2911 (S,T)
	15	MN	Q730	HT32911280	1		TRANSISTOR 2SC2911 (S,T)
	15	MN	Q731	HT32911280	1		TRANSISTOR 2SC2911 (S,T)
	15	MN	Q732	HT32911280	1		TRANSISTOR 2SC2911 (S,T)
	16	M	Q733	HV00004080	1		VARISTOR STV-3H
	16	M	Q734	HV00004080	1		VARISTOR STV-3H
	00	M	Q735	HT326342A0	1		TRANSISTOR 2SC2634 (R,S)
	00	M	Q736	HT326342A0	1		TRANSISTOR 2SC2634 (R,S)
	00	M	Q737	HD20003210	1		DIODE 1S2471
	00	M	Q738	HD20003210	1		DIODE 1S2471
	00	M	Q739	HT30945280	1		TRANSISTOR 2SC945 (P,Q)
	00	M	Q740	HT30945280	1		TRANSISTOR 2SC945 (P,Q)
	00	M	Q741	HD20003210	1		DIODE 1S2471

ENGINEERING PART LIST

ITEM	H	ORDER	101H	BRAND	MZ	ORDER NAME	SR7000G	REGISTER DATE	79-12
BLOCK NO.	HMAA4800	DESCRIPTION	O MAIN AMP ASSY					PAGE	

M-SPEC (SL) QTY

P000000000(00)	P000000002(00)		

FA GD	LOT	ODN CCS	SYM.NO.	PART CODE	Q T Y	K T S	PART NAME / NOTICE
	00	M	Q742	HD20003210	1		DIODE 1S2471
	00	M	Q743	HD20003210	1		DIODE 1S2471
	00	M	Q744	HD20003210	1		DIODE 1S2471
	00	M	Q745	HT10733280	1		TRANSISTOR 2SA733 (P,Q)
	00	M	Q746	HT10733280	1		TRANSISTOR 2SA733 (P,Q)
	00	M	Q747	HD20003210	1		DIODE 1S2471
	00	M	Q748	HD20003210	1		DIODE 1S2471
	15	MN	Q749	HT32911280	1		TRANSISTOR 2SC2911 (S,T)
	15	MN	Q750	HT32911280	1		TRANSISTOR 2SC2911 (S,T)
	15	MN	Q751	HT11209280	1		TRANSISTOR 2SA1209 (S,T)
	15	MN	Q752	HT11209280	1		TRANSISTOR 2SA1209 (S,T)
	15	XM	Q753	HT32344240	1	52.01.	TRANSISTOR 2SC2344 (D,E)
	15	XM	Q754	HT32344240	1	53.01.	TRANSISTOR 2SC2344 (D,E)
	15	XM	Q755	HT11011240	1	52.02.	TRANSISTOR 2SA1011 (D,E)
	15	XM	Q756	HT11011240	1	53.02.	TRANSISTOR 2SA1011 (D,E)
	14	XMN	Q757	HT32922280	1	50.01.	TRANSISTOR 2SC2922 (O,Y)
	14	XMN	Q758	HT32922280	1	51.01.	TRANSISTOR 2SC2922 (O,Y)
	14	XMN	Q759	HT11216280	1	50.02.	TRANSISTOR 2SA1216 (O,Y)
	14	XMN	Q760	HT11216280	1	51.02.	TRANSISTOR 2SA1216 (O,Y)
	00	M	Q761	HD20011010	1		DIODE W06C

ENGINEERING PART LIST

ITEM	H	ORDER	101H	BRAND	MZ	ORDER NAME	SR7000G	REGISTER DATE	79-12
BLOCK NO.	HMAA4800	DESCRIPTION	O MAIN AMP ASSY						PAGE

M-SPEC (SL) QTY

P000000000(00)	P000000002(00)		

FA GD	LOT	ODN CCS	SYM.NO.	PART CODE	Q T Y	K T S	PART NAME / NOTICE
	00	M	Q762	HD20011010	1		DIODE W06C
	00	M	Q763	HD20011010	1		DIODE W06C
	00	M	Q764	HD20011010	1		DIODE W06C
	00	M	R701	GD05224141	1		RESISTOR 220K OHM J 1/4W
	00	M	R702	GD05224141	1		RESISTOR 220K OHM J 1/4W
	00	M	R703	GD05821141	1		RESISTOR 820 OHM J 1/4W
	00	M	R704	GD05821141	1		RESISTOR 820 OHM J 1/4W
	15	M	R705	GD05333141	1		RESISTOR 33K OHM J 1/4W
	15	M	R706	GD05333141	1		RESISTOR 33K OHM J 1/4W
	15	M	R709	RA04710040	1		TRIMMING RESIST 470 OHM (B)
	15	M	R710	RA04710040	1		TRIMMING RESIST 470 OHM (B)
	18	M	R711	GD05224140	1		RESISTOR 220K OHM J 1/4W
	18	M	R712	GD05224140	1		RESISTOR 220K OHM J 1/4W
	00	M	R713	GD05270141	1		RESISTOR 27 OHM J 1/4W
	00	M	R714	GD05270141	1		RESISTOR 27 OHM J 1/4W
	00	M	R715	GD05270141	1		RESISTOR 27 OHM J 1/4W
	00	M	R716	GD05270141	1		RESISTOR 27 OHM J 1/4W
	00	M	R717	GD05102141	1		RESISTOR 1K OHM J 1/4W
	00	M	R718	GD05102141	1		RESISTOR 1K OHM J 1/4W
	00	M	R719	GD05223141	1		RESISTOR 22K OHM J 1/4W

ENGINEERING PART LIST

ITEM	H	ORDER	101H	BRAND	MZ	ORDER NAME	SR70006	REGISTER DATE	79-12
BLOCK NO.	HMAA4800		DESCRIPTION	0 MAIN AMP ASSY					PAGE

M-SPEC (SL) QTY

P000000000(00)	P000000002(00)		

FA GD	LOT	ODN OCS	SYM.NO.	PART CODE	Q T Y	K T S	PART NAME / NOTICE
	00	M	R720	GD05223141	1		RESISTOR 22K OHM J 1/4W
	00	M	R721	GD05821141	1		RESISTOR 820 OHM J 1/4W
	00	M	R722	GD05821141	1		RESISTOR 820 OHM J 1/4W
	00	M	R723	GD05181141	1		RESISTOR 180 OHM J 1/4W
	00	M	R724	GD05181141	1		RESISTOR 180 OHM J 1/4W
	00	M	R725	GD05681141	1		RESISTOR 680 OHM J 1/4W
	00	M	R726	GD05681141	1		RESISTOR 680 OHM J 1/4W
	00	M	R727	GD05222141	1		RESISTOR 2.2K OHM J 1/4W
	00	M	R728	GD05222141	1		RESISTOR 2.2K OHM J 1/4W
	00	M	R729	GD05222141	1		RESISTOR 2.2K OHM J 1/4W
	00	M	R730	GD05222141	1		RESISTOR 2.2K OHM J 1/4W
	00	M	R731	GD05222141	1		RESISTOR 2.2K OHM J 1/4W
	00	M	R732	GD05222141	1		RESISTOR 2.2K OHM J 1/4W
	00	M	R733	GD05222141	1		RESISTOR 2.2K OHM J 1/4W
	00	M	R734	GD05222141	1		RESISTOR 2.2K OHM J 1/4W
	15	M	R735	GD05122141	1		RESISTOR 1.2K OHM J 1/4W
	15	M	R736	GD05122141	1		RESISTOR 1.2K OHM J 1/4W
	00	M	R739	GA05472010	1		RESISTOR 4.7K OHM J 1W
	00	M	R740	GA05472010	1		RESISTOR 4.7K OHM J 1W
	00	M	R741	GD05331141	1		RESISTOR 330 OHM J 1/4W

ENGINEERING PART LIST

ITEM	H	ORDER	101H	BRAND	MZ	ORDER NAME	SR7000G	REGISTER DATE	79-12
BLOCK NO.	HMAA48QQ	DESCRIPTION	Q MAIN AMP ASSY						PAGE

M-SPEC (SL) QTY

P000000000(00)	P000000002(00)		

FA GD	LOT	ODN CCS	SYM.NO	PART CODE	Q T Y	K T S	PART NAME / NOTICE
	00	M	R742	GD05331141	1		RESISTOR 330 OHM J 1/4W
	00	M	R743	GD05331141	1		RESISTOR 330 OHM J 1/4W
	00	M	R744	GD05331141	1		RESISTOR 330 OHM J 1/4W
	00	M	R745	GD05273141	1		RESISTOR 27K OHM J 1/4W
	00	M	R746	GD05273141	1		RESISTOR 27K OHM J 1/4W
	00	M	R747	GD05681141	1		RESISTOR 680 OHM J 1/4W
	00	M	R748	GD05681141	1		RESISTOR 680 OHM J 1/4W
	00	M	R749	GD05102141	1		RESISTOR 1K OHM J 1/4W
	00	M	R750	GD05102141	1		RESISTOR 1K OHM J 1/4W
	00	M	R751	GD05331141	1		RESISTOR 330 OHM J 1/4W
	00	M	R752	GD05331141	1		RESISTOR 330 OHM J 1/4W
	00	M	R753	GD05473141	1		RESISTOR 47K OHM J 1/4W
	00	M	R754	GD05473141	1		RESISTOR 47K OHM J 1/4W
	00	M	R757	GD05822141	1		RESISTOR 8.2K OHM J 1/4W
	00	M	R758	GD05822141	1		RESISTOR 8.2K OHM J 1/4W
	00	M	R759	GD05100141	1		RESISTOR 10 OHM J 1/4W
	00	M	R760	GD05100141	1		RESISTOR 10 OHM J 1/4W
	00	M	R761	GD05102141	1		RESISTOR 1K OHM J 1/4W
	00	M	R762	GD05102141	1		RESISTOR 1K OHM J 1/4W
	00	M	R763	GD05101141	1		RESISTOR 100 OHM J 1/4W

ENGINEERING PART LIST

ITEM	H	ORDER	101H	BRAND	MZ	ORDER NAME	SR7000G	REGISTER DATE	79-12
BLOCK NO.	HMAA4800	DESCRIPTION	O MAIN AMP ASSY						PAGE

M-SPEC (SL) QTY

P000000000(00)	P000000002(00)		

FA GD	LOT	ODN CCS	SYM.NO.	PART CODE	Q T Y	K T S	PART NAME / NOTICE
	00	M	R764	GD05101141	1		RESISTOR 100 OHM J 1/4W
	15	M	R765	RA01020360	1		TRIMMING RESIST 1K OHM (B)
	15	M	R766	RA01020360	1		TRIMMING RESIST 1K OHM (B)
	00	M	R767	GD05332141	1		RESISTOR 3.3K OHM J 1/4W
	00	M	R768	GD05332141	1		RESISTOR 3.3K OHM J 1/4W
	15	M	R769	GD05393141	1		RESISTOR 39K OHM J 1/4W
	15	M	R770	GD05393141	1		RESISTOR 39K OHM J 1/4W
	00	M	R771	GD05332141	1		RESISTOR 3.3K OHM J 1/4W
	00	M	R772	GD05332141	1		RESISTOR 3.3K OHM J 1/4W
	00	M	R773	GG05271140	1		RESISTOR 270 OHM J 1/4W
	00	M	R774	GG05271140	1		RESISTOR 270 OHM J 1/4W
	00	M	R775	GG05271140	1		RESISTOR 270 OHM J 1/4W
	00	M	R776	GG05271140	1		RESISTOR 270 OHM J 1/4W
	00	M	R777	GG05561120	1		RESISTOR 560 OHM J 1/2W
	00	M	R778	GG05561120	1		RESISTOR 560 OHM J 1/2W
	00	M	R779	GG05151120	1		RESISTOR 150 OHM J 1/2W
	00	M	R780	GG05151120	1		RESISTOR 150 OHM J 1/2W
	00	M	R781	GD05100141	1		RESISTOR 10 OHM J 1/4W
	00	M	R782	GD05100141	1		RESISTOR 10 OHM J 1/4W
	00	M	R783	GD05100141	1		RESISTOR 10 OHM J 1/4W

ENGINEERING PART LIST

ITEM	H	ORDER	101H	BRAND	MZ	ORDER NAME	SR7000G	REGISTER DATE	79-12
BLOCK NO.	HMAA4800	DESCRIPTION	0 MAIN AMP ASSY						PAGE

M-SPEC (SL) QTY

P000000000(00)	P000000002(00)		

FA GD	LOT	ODN CCS	SYM.NO.	PART CODE	Q T Y	K T S	PART NAME / NOTICE
	00	M	R784	GD05100141	1		RESISTOR 10 OHM J 1/4W
	00	M	R785	GD10272050	1		RESISTOR 0.27 OHM K 5W
	00	M	R786	GD10272050	1		RESISTOR 0.27 OHM K 5W
	00	M	R787	GD10272050	1		RESISTOR 0.27 OHM K 5W
	00	M	R788	GD10272050	1		RESISTOR 0.27 OHM K 5W
	00	M	R789	GA05100030	1		RESISTOR 10 OHM J 3W
	00	M	R790	GA05100030	1		RESISTOR 10 OHM J 3W
	00	M	R791	RC10022120	1		RESISTOR 2.2 OHM K 1/2W
	00	M	R792	RC10022120	1		RESISTOR 2.2 OHM K 1/2W
	00	M	R793	GD05273141	1		RESISTOR 27K OHM J 1/4W
	00	M	R794	GD05273141	1		RESISTOR 27K OHM J 1/4W
	00	M	R795	GD05122141	1		RESISTOR 1.2K OHM J 1/4W
	00	M	R796	GD05122141	1		RESISTOR 1.2K OHM J 1/4W
		SYM-CNT		193			

ENGINEERING PART LIST

ITEM	H	ORDER	101H	BRAND	NZ	ORDER NAME	SR7000G	REGISTER DATE	79-12
BLOCK NO.		HPSA5000		DESCRIPTION		O POWER SUPPLY & PROTECTOR ASSY			PAGE

M-SPEC (SL) QTY

P000000000(00)	P000000002(00)		

FA GD	LOT	ODN CCS	SYM NO.	PART CODE	Q T Y	K T S	PART NAME / NOTICE
	13	M	CN01	EA22700631	1		ELECT CAP 220UF M 6.3V
	00	M	CN02	EA47601030	1		ELECT CAP 47 UF 10V
	13	M	CN03	EA22700631	1		ELECT CAP 220UF M 6.3V
	13	M	CN04	EA22700631	1		ELECT CAP 220UF M 6.3V
	13	M	C801	EA10605031	1		ELECT CAP 10UF M 50V
	00	M	C802	EA10705030	1		ELECT CAP 100 UF M 50V
	00	M	C803	EA47705030	1		ELECT CAP 470 UF M 50V
	13	M	C804	EA47505031	1		ELECT CAP 4.7UF M 50V
	13	M	C805	EA47505031	1		ELECT CAP 4.7UF M 50V
	13	M	C806	DK18473321	1		CERAMIC CAP. 0.047 480, -200/0 50V
	13	M	C807	DK18473321	1		CERAMIC CAP. 0.047 +80, -200/0 50V
	13	M	C808	EA10701631	1		ELECT CAP 100 UF M 16V
	13	M	C809	EA10605031	1		ELECT CAP 10UF M 50V
	13	M	C810	EA10605031	1		ELECT CAP 10UF M 50V
	13	M	C813	EA10605031	1		ELECT CAP 10UF M 50V
	13	M	C815	EA10701631	1		ELECT CAP 100 UF M 16V
	03	M	C816	DK18103560	1		CERAMIC CAP. 0.01 UF Z E 500V
	03	M	C817	EA33701630	1		ELECT CAP 330UF M 16V
	09	M	C818	DK18103300	1		CERAMIC CAP. 0.01 UF 50V
	00	M	JN01	YP06000590	1		PLUG 7P BASE POST

ENGINEERING PART LIST

ITEM	H	ORDER	101H	BRAND	MZ	ORDER NAME	SR7000G	REGISTER DATE	79-12
BLOCK NO.	HPSA5000		DESCRIPTION		0 POWER SUPPLY & PROTECTOR ASSY				PAGE

M-SPEC (SL) QTY

P000000000(00)	P000000002(00)		

FA GD	LOT	ODN OCS	SYM.NO.	PART CODE	Q T Y	K T S	PART NAME / NOTICE
	00	N	JN02	YP06000600	1		PLUG 9P BASE POST
	00	N	JN03	YP06000600	1		PLUG 9P BASE POST
	00	D	LN01	LY20240140	1		RELAY DEC 3A MU2U 24V
	15	XMN	P800	WK101H1082	1		P.W. BOARD POWER SUPP LY P,W,B
	00	M	QN01	HT326342A0	1		TRANSISTOR 2SC2634 (R,S)
	00	M	QN02	HT326342A0	1		TRANSISTOR 2SC2634 (R,S)
	00	M	QN03	HD20003210	1		DIODE 1S2471
	00	M	QN04	HT326342A0	1		TRANSISTOR 2SC2634 (R,S)
	00	M	QN05	HT326342A0	1		TRANSISTOR 2SC2634 (R,S)
	00	M	QN06	HT405712A0	1		TRANSISTOR 2SD571 (M,L)
	00	M	QN07	HD20003210	1		DIODE 1S2471
	00	M	QN08	HD20003210	1		DIODE 1S2471
	02	M	QN10	HD20003210	1		DIODE 1S2471
	00	M	Q801	HD20005010	1		DIODE W06B
	00	M	Q802	HD20005010	1		DIODE W06B
	00	M	Q803	HD20005010	1		DIODE W06B
	00	M	Q804	HD20005010	1		DIODE W06B
	00	M	Q805	HD20005010	1		DIODE W06B
	00	M	Q806	HD20005010	1		DIODE W06B
	00	N	Q807	HT30945280	1		TRANSISTOR 2SC945 (P,Q)

ENGINEERING PART LIST

ITEM	H	ORDER	101H	BRAND	MZ	ORDER NAME	SR7000G	REGISTER DATE	79-12
BLOCK NO.	HPSA5000	DESCRIPTION	0 POWER SUPPLY & PROTECTOR ASSY					PAGE	

M-SPEC (SL) QTY

P000000000(00)	P000000002(00)		

FA GD	LOT	ODN CCS	SYM.NO.	PART CODE	Q T Y	K T S	PART NAME / NOTICE
	00	M	Q808	HT30945280	1		TRANSISTOR 2SC945 (P,Q)
	00	M	Q809	HT403131E0	1		TRANSISTOR 2SD313(E)
	00	M	Q810	HD20003210	1		DIODE 1S2471
	00	M	Q811	HD30027090	1		ZENER WZ140
	00	M	Q812	HD30027090	1		ZENER WZ140
	00	M	Q813	HT206052A0	1		TRANSISTOR 2SB605 (M,L)
	00	M	Q814	HT10733280	1		TRANSISTOR 2SA733 (P,Q)
	00	M	Q815	HT10733280	1		TRANSISTOR 2SA733 (P,Q)
	00	M	RN01	GD05272141	1		RESISTOR 2.7K OHM J 1/4W
	00	M	RN02	GD05102141	1		RESISTOR 1K OHM J 1/4W
	00	M	RN03	GD05472141	1		RESISTOR 4.7K OHM J 1/4W
	00	M	RN04	GD05101141	1		RESISTOR 100 OHM J 1/4W
	00	M	RN06	GA05562010	1		RESISTOR 5.6K OHM J 1W
	00	M	RN07	GA05562010	1		RESISTOR 5.6K OHM J 1W
	00	M	RN08	GD05393141	1		RESISTOR 39K OHM J 1/4W
	00	M	RN09	GD05223141	1		RESISTOR 22K OHM J 1/4W
	00	M	RN10	GD05562141	1		RESISTOR 5.6K OHM J 1/4W
	00	M	RN11	GD05154141	1		RESISTOR 150K OHM J 1/4W
	00	M	RN12	GD05393141	1		RESISTOR 39K OHM J 1/4W
	00	M	RN13	GD05100141	1		RESISTOR 10 OHM J 1/4W

ENGINEERING PART LIST

ITEM	H	ORDER	101H	BRAND	MZ	ORDER NAME	SR7000G	REGISTER DATE	79-12
BLOCK NO.	HPSA5000	DESCRIPTION	0 POWER SUPPLY & PROTECTOR ASSY					PAGE	

P000000000(00)	P000000002(00)	M-SPEC (SL) QTY

FA GD	LOT	ODN CCS	SYM.NO.	PART CODE	Q T Y	K T S	PART NAME / NOTICE
	03	M	RN14	GA05101010	1		RESISTOR 100OHM J 1W
	00	M	RN15	GD05561141	1		RESISTOR 560 OHM J 1/4W
	00	M	RN16	GD05562141	1		RESISTOR 5.6K OHM J 1/4W
	03	M	RN17	GD05123141	1		RESISTOR 12K OHM J 0.25W
	00	M	R801	GD05103141	1		RESISTOR 10K OHM J 1/4W
	00	M	R802	GD05103141	1		RESISTOR 10K OHM J 1/4W
	00	M	R803	GA05560020	1		RESISTOR 56 OHM J 2W
	00	M	R804	GD05103141	1		RESISTOR 10K OHM J 1/4W
	00	M	R805	GD05103141	1		RESISTOR 10K OHM J 1/4W
	00	M	R806	GD05223141	1		RESISTOR 22K OHM J 1/4W
	00	M	R807	GD05474141	1		RESISTOR 470K OHM J 1/4W
	00	M	R808	GD05562141	1		RESISTOR 5.6K OHM J 1/4W
	00	M	R809	GD05332141	1		RESISTOR 3.3K OHM J 1/4W
	00	M	R810	GD05183141	1		RESISTOR 18K OHM J 1/4W
	00	M	R811	GD05223141	1		RESISTOR 22K OHM J 1/4W
	00	M	R812	GD05102141	1		RESISTOR 1K OHM J 1/4W
	00	M	R813	GD05102141	1		RESISTOR 1K OHM J 1/4W
		SYM-CNT		77			

ENGINEERING PART LIST

ITEM	H	ORDER	101H	BRAND	MZ	ORDER NAME	SR7000G	REGISTER DATE	79-12
BLOCK NO.	HSWA6600	DESCRIPTION	0 TAPE,MUTING,FILTER SW ASSY						PAGE

M-SPEC (SL) QTY			
P000000000(00)	P000000002(00)		

FA GD	LOT	ODN OCS	SYM.NO.	PART CODE	Q T Y	K T S	PART NAME / NOTICE
	13	M	CS01	DF15473351	1		FILM CAP. 0.047 UF J 50V
	13	M	CS02	DF15473351	1		FILM CAP. 0.047 UF J 50V
	13	M	CS03	DK16271301	1		CERAMIC CAP. 270 PF K 50V
	13	M	CS04	DK16271301	1		CERAMIC CAP. 270 PF K 50V
	13	M	CS05	EA47405031	1		ELECT CAP 0.47 UF M 50V
	13	M	CS06	EA47405031	1		ELECT CAP 0.47 UF M 50V
	13	M	CS07	DF15473351	1		FILM CAP. 0.047 UF J 50V
	13	M	CS08	DF15473351	1		FILM CAP. 0.047 UF J 50V
	13	M	CS09	DK16681301	1		CERAMIC CAP. 680 PF M 50V
	13	M	CS10	DK16681301	1		CERAMIC CAP. 680 PF M 50V
	00	M	JS04	YP06001040	1		PLUG 3P BASE POST
	00	XMN	PS00	WK101H00C0	1	52.03.	P.W. BOARD SW P.W.B.(94HB)
	00	M	RS01	GD05564141	1		RESISTOR 560K OHM 1/4W J
	00	M	RS02	GD05564141	1		RESISTOR 560K OHM 1/4W J
	00	M	RS03	GD05104141	1		RESISTOR 100K OHM 1/4W J
	00	M	RS04	GD05104141	1		RESISTOR 100K OHM 1/4W J
	00	M	RS05	GD05331141	1		RESISTOR 330 OHM J 1/4W
	00	M	RS06	GD05331141	1		RESISTOR 330 OHM J 1/4W
	00	M	RS09	GD05682141	1		RESISTOR 6.8K OHM 1/4W J
	00	M	RS10	GD05682141	1		RESISTOR 6.8K OHM 1/4W J

ENGINEERING PART LIST

ITEM	H	ORDER	101H	BRAND	MZ	ORDER NAME	SR7000G	REGISTER DATE	79-12
BLOCK NO.	HSWA6600	DESCRIPTION	0 TAPE,MUTING,FILTER SW ASSY					PAGE	

M-SPEC (SL) QTY

P000000000(00)	P000000002(00)		

FA GD	LOT	ODN CCS	SYM.NO.	PART CODE	Q T Y	K T S	PART NAME / NOTICE
	00	M	RS11	GD05681141	1		RESISTOR 680 OHM J 0.25W
	00	M	RS12	GD05681141	1		RESISTOR 680 OHM J 0.25W
	00	M	RS13	GD05272141	1		RESISTOR 2.7K OHM J 0.25W
	00	M	RS14	GD05272141	1		RESISTOR 2.7K OHM J 0.25W
	00	M	RS15	GD05273141	1		RESISTOR 27K OHM 1/4W J
	00	M	RS16	GD05273141	1		RESISTOR 27K OHM 1/4W J
	03	M	RS17	GD05154141	1		RESISTOR 150K OHM J 0.25W
	00	DN	SS01	SP04060100	1		PUSH SWITCH FILTER,MONITOR,LOUD,MONO1ST
		SYM-CNT		28			

ENGINEERING PART LIST

ITEM	H	ORDER	101H	BRAND	MZ	ORDER NAME	SR7000G	REGISTER DATE	79-12
BLOCK NO.		HSWA6700	DESCRIPTION		1 SPK SW & METER RANGE SW ASSY				PAGE

M-SPEC (SL) QTY

P000000000(00)	P000000002(00)		

FA GD	LOT	ODN CCS	SYM NO.	PART CODE	Q T Y	K T S	PART NAME / NOTICE
	00	XMN	P100	WK101H00G0	1	52.07.	P.W. BOARD SPK SW P.W.B (94HB)
	00	M	RT01	GP05331030	1		RESISTOR 330 OHM J 3W
	00	M	RT02	GP05331030	1		RESISTOR 330 OHM J 3W
	00	M	RT03	GD05473141	1		RESISTOR 47K OHM J 1/4W
	00	M	RT04	GD05473141	1		RESISTOR 47K OHM J 1/4W
	00	M	RT05	GD05102141	1		RESISTOR 1K OHM J 1/4W
	00	M	RT06	GD05102141	1		RESISTOR 1K OHM J 1/4W
	00	M	RT07	GD05392141	1		RESISTOR 3.9K OHM J 1/4W
	00	M	RT08	GD05392141	1		RESISTOR 3.9K OHM J 1/4W
		SYM-CNT		9			

ENGINEERING PART LIST

ITEM	F	ORDER	101H	BRAND	MZ	ORDER NAME	SR7000G	REGISTER DATE	79-12
BLOCK NO.		HSWA6701		DESCRIPTION		0 SPK SW ASSY FOR SR7000G			PAGE

P000000000(14)	P000000002(14)		M-SPEC (SL) QTY

FA GD	LOT	ODN CCS	SYM.NO.	PART CODE	Q T Y	K T S	PART NAME / NOTICE
	14	D	ST01	SP06030170	1		PUSH SWITCH SPK & METER RANGE SW
		SYN-CNT		1			

ENGINEERING PART LIST

ITEM	H	ORDER	101H	BRAND	MZ	ORDER NAME	SR7000G	REGISTER DATE	79-12
BLOCK NO.	HTEA0700	DESCRIPTION	0 TAPE 1 INPUT ASSY.						PAGE

M-SPEC (SL) QTY

P000000000(00)	P000000002(00)		

FA GD	LOT	ODN CCS	SYM.NO.	PART CODE	Q T Y	K T S	PART NAME / NOTICE
	00	MS	JV11	YT02040282	1		TERMINAL TAPE 1 IN.OUT
	00	XMN	PV00	YK21161720	1	51.02.	P.W. BOARD
	04	M	WV01	YU07080240	1		JUMPER LEAD 80MM
		SYM-CNT		3			

ENGINEERING PART LIST

ITEM	H	ORDER	101H	BRAND	MZ	ORDER NAME	SR7000G	REGISTER DATE	79-12
BLOCK NO.	HIDA3100	DESCRIPTION	0 TONE AMP ASSY.						PAGE

P000000000(00)	P000000002(00)	M-SPEC (SL) QTY

FA GD	LOT	ODN CCS	SYM.NO.	PART CODE	Q T Y	K T S	PART NAME / NOTICE
	00	M	CE01	EE10505040	1		ELECT CAP 1 UF 50V M
	00	M	CE02	EE10505040	1		ELECT CAP 1 UF 50V M
	13	M	CE03	DK16101301	1		CERAMIC CAP. 100 PF K 50V
	13	M	CE04	DK16101301	1		CERAMIC CAP. 100 PF K 50V
	00	M	CE05	EE33505040	1		ELECT CAP 3.3 UF M 50V
	00	M	CE06	EE33505040	1		ELECT CAP 3.3 UF M 50V
	13	M	CE07	DK16101301	1		CERAMIC CAP. 100 PF K 50V
	13	M	CE08	DK16101301	1		CERAMIC CAP. 100 PF K 50V
	03	M	CE09	DF16222300	1		FILM CAP. 2200PF K 50V
	03	M	CE10	DF16222300	1		FILM CAP. 2200PF K 50V
	13	M	CE11	DF16562301	1		FILM CAP. 5600 PF K 50V
	13	M	CE12	DF16562301	1		FILM CAP. 5600 PF K 50V
	13	M	CE15	DF16183301	1		FILM CAP. 0.018 UF M 50V
	13	M	CE16	DF16183301	1		FILM CAP. 0.018 UF M 50V
	13	M	CE17	DF16183301	1		FILM CAP. 0.018 UF M 50V
	13	M	CE18	DF16183301	1		FILM CAP. 0.018 UF M 50V
	13	M	CE19	DF16822301	1		FILM CAP. 8200 PF M 50V
	13	M	CE20	DF16822301	1		FILM CAP. 8200 PF M 50V
	13	M	CE21	DD15560371	1		CERAMIC CAP. 56 PF J 50V
	13	M	CE22	DD15560371	1		CERAMIC CAP. 56 PF J 50V

ENGINEERING PART LIST

ITEM	H	ORDER	101H	BRAND	MZ	ORDER NAME	SR7000G	REGISTER DATE	79-12
BLOCK NO.	HT0A3100	DESCRIPTION	0 TONE AMP ASSY.						PAGE

M-SPEC (SL) QTY

P000000000(00)	P000000002(00)		

FA GD	LOT	ODN CCS	SYM.NO.	PART CODE	Q T Y	K T S	PART NAME / NOTICE
	13	M	CE23	EA47505031	1		ELECT CAP 4.7UF M 50V
	13	M	CE24	EA47505031	1		ELECT CAP 4.7UF M 50V
	00	XMN	PE00	WK101H00E0	1	52.05.	P.W. BOARD TONE AMP P.W.B. (94HB)
	12	M	QE01	HC10008090	1		IC JRC 4558 SELECT
	12	M	QE02	HC10008090	1		IC JRC 4558 SELECT
	00	M	RE01	GD05683141	1		RESISTOR 68K OHM 0.25W J
	00	M	RE02	GD05683141	1		RESISTOR 68K OHM 0.25W J
	00	M	RE03	GD05102141	1		RESISTOR 1K OHM J 1/4W
	00	M	RE04	GD05102141	1		RESISTOR 1K OHM J 1/4W
	00	M	RE05	GD05472141	1		RESISTOR 4.7K OHM J 1/4W
	00	M	RE06	GD05472141	1		RESISTOR 4.7K OHM J 1/4W
	00	M	RE07	GD05682141	1		RESISTOR 6.8K OHM 0.25W J
	00	M	RE08	GD05682141	1		RESISTOR 6.8K OHM 0.25W J
	00	M	RE09	GD05682141	1		RESISTOR 6.8K OHM 0.25W J
	00	M	RE10	GD05682141	1		RESISTOR 6.8K OHM 0.25W J
	00	M	RE11	GD05562141	1		RESISTOR 5.6K OHM 0.25W J
	00	M	RE12	GD05562141	1		RESISTOR 5.6K OHM 0.25W J
	00	M	RE13	GD05562141	1		RESISTOR 5.6K OHM 0.25W J
	00	M	RE14	GD05562141	1		RESISTOR 5.6K OHM 0.25W J
	00	M	RE15	GD05223141	1		RESISTOR 22K OHM 0.25W J

ENGINEERING PART LIST

ITEM	H	ORDER	101H	BRAND	MZ	ORDER NAME	SR7000G	REGISTER DATE	79-12
BLOCK NO.		HTOA3100		DESCRIPTION		0 TONE AMP ASSY.			PAGE

M-SPEC (SL) QTY

P000000000(00)	P000000002(00)		

FA GD	LOT	ODN CCS	SYM.NO.	PART CODE	Q T Y	K T S	PART NAME / NOTICE
	00	M	RE16	GD05223141	1		RESISTOR 22K OHM 0.25W J
	00	M	RE17	GD05223141	1		RESISTOR 22K OHM 0.25W J
	00	M	RE18	GD05223141	1		RESISTOR 22K OHM 0.25W J
	00	M	RE19	GD05223141	1		RESISTOR 22K OHM 0.25W J
	00	M	RE20	GD05223141	1		RESISTOR 22K OHM 0.25W J
	00	M	RE21	GD05103141	1		RESISTOR 10K OHM 0.25W J
	00	M	RE22	GD05103141	1		RESISTOR 10K OHM 0.25W J
	00	M	RE23	GD05470141	1		RESISTOR 47 OHM 0.25W J
	00	M	RE24	GD05470141	1		RESISTOR 47 OHM 0.25W J
	00	D	RE25	RM01040150	1		VARIABLE RESIST 100K OHM (B) TREBLE
	00	D	RE26	RM01040150	1		VARIABLE RESIST 100K OHM (B) MID
	00	D	RE27	RM01040150	1		VARIABLE RESIST 100K OHM (B) BASS
		SYM-CNT		52			

ENGINEERING PART LIST

ITEM	H	ORDER	101H	BRAND	MZ	ORDER NAME	SR7000G	REGISTER DATE	79-12
BLOCK NO.	HTUA1200	DESCRIPTION	1 TUNER & PHONO AMP. ASSY.						PAGE

M-SPEC (SL) QTY

P000000000(00)	P000000002(00)			

FA GD	LOT	ODN CCS	SYM.NO.	PART CODE	Q T Y	K T S	PART NAME / NOTICE
	00	M	CA01	DA17103011	1		CERAMIC CAP. 0.01 UF N 25V
	06	M	CA02	DF55361090	1		FILM CAP. 360 PF J 50V
	10	M	CA03	DD11100400	1		CERAMIC CAP. 10PF XL 50V
	00	M	CA04	DA17103011	1		CERAMIC CAP. 0.01 UF N 25V
	00	M	CA05	DA17103011	1		CERAMIC CAP. 0.01 UF N 25V
	00	M	CA06	DA15470011	1		CERAMIC CAP. 47 PF J 50V
	00	M	CA07	DA17103011	1		CERAMIC CAP. 0.01 UF N 50V
	00	M	CA08	EA10701690	1		ELECT CAP 100 UF 16V
	00	M	CA09	DK18403321	1		CERAMIC CAP. 0.04 UF Z 50V
	00	M	CA10	DK17103300	1		CERAMIC CAP. 0.01 UF M 25V
	00	M	CA11	DA17103011	1		CERAMIC CAP. 0.01 UF N 25V
	00	M	CA12	EA10602531	1		ELECT CAP 10UF 25V
	00	M	CA13	EA10602531	1		ELECT CAP 10 UF 25V
	00	M	CA14	DA17103011	1		CERAMIC CAP. 0.01 UF N 25V
	00	M	CA15	DA17103011	1		CERAMIC CAP. 0.01 UF N 25V
	00	M	CA16	EA22405030	1		ELECT CAP 0.22 UF 50V
	00	M	CA17	EA10505031	1		ELECT CAP 1UF 50V
	00	M	CA18	DK18223310	1		CERAMIC CAP. 0.022UF Z 50V
	00	M	CA19	EA22505031	1		ELECT CAP 2.2 UF 50V
	16	M	CA20	EA10601630	1		ELECT CAP 10 UF M 16V

ENGINEERING PART LIST

ITEM	H	ORDER	101H	BRAND	MZ	ORDER NAME	SR7000G	REGISTER DATE	79-12
BLOCK NO.	HTUA1200		DESCRIPTION	1 TUNER & PHONO AMP. ASSY.					PAGE

M-SPEC (SL) QTY		
P000000000[00]	P000000002[00]	

FA GD	LOT	ODN OCS	SYM.NO.	PART CODE	Q T Y	K T S	PART NAME / NOTICE
	00	M	C101	DD15150371	1		CERAMIC CAP. 15PF J 50V
	00	M	C102	DA17103011	1		CERAMIC CAP. 0.01 UF N 25V
	00	M	C103	DK17103301	1		CERAMIC CAP. 0.01 UF M 50V
	00	M	C104	DK18103320	1		CERAMIC CAP. 0.01UF 50V
	00	M	C105	DD15150371	1		CERAMIC CAP. 15 PF J 50V
	00	M	C106	DD10030370	1		CERAMIC CAP. 3PF 50V
	00	M	C108	DA16331011	1		CERAMIC CAP. 330 PF K 50V
	00	M	C109	DA17103011	1		CERAMIC CAP. 0.01 UF N 25V
	00	D	C110	CA32400100	1		VARIABLE CAP. FM-3.AM-2
	00	M	C111	CT11000080	1		TRIMMING CAP. 10 PF
	00	M	C112	DD10010300	1		CERAMIC CAP. 1 PF 50V CH (BLK)
	00	M	C113	DD15150340	1		CERAMIC CAP. 15PF J 50V
	00	M	C114	DD11100300	1		CERAMIC CAP. 10 PF 50V CH (BLK)
	00	M	C115	DD15300301	1		CERAMIC CAP. 30PF J 50V CH (BLK)
	00	M	C116	DD15150301	1		CERAMIC CAP. 15 PF J 50V CH (BLK)
	00	M	C117	DA17103011	1		CERAMIC CAP. 0.01 UF N 25V
	00	M	C118	DA17103011	1		CERAMIC CAP. 0.01 UF N 25V
	00	M	C119	DA17103011	1		CERAMIC CAP. 0.01 UF N 25V
	00	M	C120	DA17103011	1		CERAMIC CAP. 0.01 UF N 25V
	00	M	C121	DA17103011	1		CERAMIC CAP. 0.01 UF N 25V

ENGINEERING PART LIST

ITEM	H	ORDER	101H	BRAND	MZ	ORDER NAME	SR7000G	REGISTER DATE	79-12
BLOCK NO.	HTUA1200	DESCRIPTION	1 TUNER & PHONO AMP. ASSY.						PAGE

P000000000(00)	P000000002(00)	M-SPEC (SL) QTY

FA GD	LOT	ODN CCS	SYM.NO.	PART CODE	Q T Y	K T S	PART NAME / NOTICE
	00	M	C404	DA16221011	1		CERAMIC CAP. 220PF K 50V
	00	M	C405	EA47601031	1		ELECT CAP 47 UF M 10V
	00	M	C406	EA47601031	1		ELECT CAP 47 UF M 10V
	00	M	C407	DA15101011	1		CERAMIC CAP. 100 PF J 50V
	00	M	C408	DA15101011	1		CERAMIC CAP. 100 PF J 50V
	00	M	C409	DF15182301	1		FILM CAP. 1800 PF J 50V
	00	M	C410	DF15182301	1		FILM CAP. 1800 PF J 50V
	00	M	C411	DF15682301	1		FILM CAP. 6800 PF J 50V
	00	M	C412	DF15682301	1		FILM CAP. 6800 PF J 50V
	00	M	C413	DA15100011	1		CERAMIC CAP. 10 PF J 50V
	00	M	C414	DA15100011	1		CERAMIC CAP. 10 PF J 50V
	00	M	C415	EA47505031	1		ELECT CAP 4.7UF 50V
	00	M	C416	EA47505031	1		ELECT CAP 4.7UF 50V
	00	M	C417	DA17103011	1		CERAMIC CAP. 0.01UF N 25V
	00	M	C418	DA17103011	1		CERAMIC CAP. 0.01UF N 25V
	00	M	C419	DA15101011	1		CERAMIC CAP. 100PF J 50V
	00	M	C420	DA15101011	1		CERAMIC CAP. 100PF J 50V
	00	M	C421	DK18403321	1		CERAMIC CAP. 0.04UF 50V
	00	M	FA01	FF10045200	1		CERAMIC FILTER AM CF SFZ450B
	00	MS	JV01	YT02040282	1		TERMINAL RCA JACK (PHONO.AUX)

ENGINEERING PART LIST

ITEM	H	ORDER	101H	BRAND	NZ	ORDER NAME	SR7000G	REGISTER DATE	79-12
BLOCK NO.	HYUA1200	DESCRIPTION	1 TUNER & PHONO AMP. ASSY.					PAGE	

P000000000(00)	P000000002(00)	M-SPEC (SL) QTY

FA GD	LOT	ODN CCS	SYM.NO.	PART CODE	Q T Y	K T S	PART NAME / NOTICE
	00	MS	JV02	YT02040282	1		TERMINAL RCA JACK (TAPE-1)
	00	M	J101	YT01050010	1		TERMINAL ANT TERMINAL
	~~04~~	~~M~~	~~KP91~~	~~YK21161703~~	~~1~~		~~P.W.B BOARD~~ ~~P.W.B KIT~~
	~~00~~	~~MS~~	~~KS02~~	~~SR04050200~~	~~1~~	~~62~~	~~ROTARY SWITCH~~ ~~REC. MODE SW. KIT~~
	00	M	LA01	LQ10010480	1		OSC COIL AM OSC
	00	M	LA02	LI10010730	1		I.F.T. AM IFT
	00	M	LA03	LI10010740	1		I.F.T. AM IFT
	00	M	LA04	LC11540020	1		CHOKE COIL 150 μH
	05	M	L101	LA12026170	1		ANT COIL FM ANT COIL
	00	M	L102	LL24800030	1		COIL FM RF COIL
	00	M	L103	LK11800030	1		COIL FM RF COIL
	00	M	L104	LC17510010	1		CHOKE COIL 0.75 μH
	00	M	L105	LI10016010	1		I.F.T. FM IFT
	00	M	L106	LQ12036010	1		OSC COIL FM OSC COIL
	00	M	L107	LC13320050	1		CHOKE COIL 3.3 μH
	00	MN	L108	LC12230060	1		CHOKE COIL 22 μH
	00	M	L109	LI10156240	1		I.F.T. DET COIL
	00	M	L110	LI10156230	1		I.F.T. DET COIL
	00	MN	L301	LS10015070	1		M.P.X.COIL LPF(38KHZ)
	00	MN	L302	LS10015070	1		M.P.X.COIL LPF(38KHZ)

ENGINEERING PART LIST

ITEM	H	ORDER	101H	BRAND	MZ	ORDER NAME	SR7000G	REGISTER DATE	79-12
BLOCK NO.	HTUA1200	DESCRIPTION	1 TUNER & PHONO AMP. ASSY.						PAGE

P000000000(00)	P000000002(00)	M-SPEC (SL) QTY

FA GD	LOT	ODN CCS	SYM.NO.	PART CODE	Q T Y	K T S	PART NAME / NOTICE
	00	XMN	P100	YK21161712	1	51.01.	P.W. BOARD TUNER & PHONO PWB
	~~00~~	~~MK~~	~~P112~~	~~75061501P0~~	~~3~~		~~JUMPER~~ ~~JUMPER 15 MM~~
	~~00~~	~~MK~~	~~P113~~	~~75062001P0~~	~~3~~		~~JUMPER~~ ~~JUMPER 20 MM~~
	00	M	QA01	HC10025060	1		IC UPC1178C
	00	M	QA02	HV00006120	1		VARISTOR MV-203
	00	M	QA03	HD20011050	1		DIODE 1S1555
	00	M	QA04	HT32634280	1		TRANSISTOR 2SC2634
	00	M	QA05	HD20011050	1		DIODE 1S1555
	00	M	Q101	HF40045180	1		F.E.T. 3SK45 B
	00	M	Q102	HT31047100	1		TRANSISTOR 2SC1047 C
	00	M	Q103	HT30829100	1		TRANSISTOR 2SC829 C
	00	M	Q104	HT31047100	1		TRANSISTOR 2SC1047 C
	00	M	Q105	HC10033010	1		IC HA11225
	03	M	Q106	HD20001210	1		DIODE 1S2473
	00	MN	Q301	HC10001420	1		IC KB4437
	03	M	Q302	HD20001210	1		DIODE 1S2473
	00	M	Q303	HT32634280	1		TRANSISTOR 2SC2634 S T
	00	M	Q304	HT32634280	1		TRANSISTOR 2SC2634 S T
	00	M	Q305	HT32634280	1		TRANSISTOR 2SC2634 S T
	00	M	Q306	HT32634280	1		TRANSISTOR 2SC2634 S T

ENGINEERING PART LIST

ITEM	H	ORDER	101H	BRAND	MZ	ORDER NAME	SR7000G	REGISTER DATE	79-12
BLOCK NO.	HTUA1200	DESCRIPTION	1 TUNER & PHONO AMP. ASSY.						PAGE

M-SPEC (SL) QTY

P000000000(00)	P000000002(00)		

FA GD	LOT	ODN CCS	SYM.NO.	PART CODE	Q T Y	K T S	PART NAME / NOTICE
	00	M	Q307	HT11127280	1		TRANSISTOR 2SA1127 S T
	00	M	Q308	HT11127280	1		TRANSISTOR 2SA1127 S T
	00	M	Q309	HT32634280	1		TRANSISTOR 2SC2634 S T
	00	M	Q310	HT32634280	1		TRANSISTOR 2SC2634 S T
	03	M	Q311	HD20001210	1		DIODE 1S2473
	03	M	Q312	HD20001210	1		DIODE 1S2473
	00	MN	Q401	HC10034010	1		IC HA1457W (HITACHI)
	00	MN	Q402	HC10034010	1		IC HA1457W (HITACHI)
	00	M	RA01	GD05102141	1		RESISTOR 1K OHM J 1/4W
	00	M	RA02	GD05222141	1		RESISTOR 2.2K OHM J 1/4W
	00	M	RA03	GG05101140	1		RESISTOR 100 OHM J 1/4W
	00	M	RA05	GD05563141	1		RESISTOR 56K OHM J 1/4W
	00	M	RA06	GD05333141	1		RESISTOR 33K OHM J 1/4W
	00	M	RA07	GD05102141	1		RESISTOR 1K OHM J 1/4W
	00	M	RA08	GD05222141	1		RESISTOR 2.2K OHM J 1/4W
	00	M	RA09	GD05103141	1		RESISTOR 10K OHM J 1/4W
	00	M	RA10	GD05103141	1		RESISTOR 10K OHM J 1/4W
	00	M	RA12	GD05473141	1		RESISTOR 47K OHM J 1/4W
	00	M	RA13	GD05103141	1		RESISTOR 10K OHM J 1/4W
	00	M	RA14	GD05103141	1		RESISTOR 10K OHM J 1/4W

ENGINEERING PART LIST

ITEM	H	ORDER	101H	BRAND	MZ	ORDER NAME	SR7000G	REGISTER DATE	79-12
BLOCK NO.		HTUA1200		DESCRIPTION		1 TUNER & PHONO AMP. ASSY.			PAGE

M-SPEC (SL) QTY

P000000000(00)	P000000002(00)		

FA GD	LOT	ODN CCS	SYM.NO.	PART CODE	Q T Y	K T S	PART NAME / NOTICE
	00	M	RA15	GD05223141	1		RESISTOR 22K OHM J 1/4W
	00	M	RA17	GD05473140	1		RESISTOR 47KOHM 1/4W
	00	M	R101	GD05105141	1		RESISTOR 1M OHM J 1/4W
	00	M	R102	GD05101141	1		RESISTOR 100 OHM J 1/4W
	00	M	R103	GD05101141	1		RESISTOR 100 OHM J 1/4W
	00	M	R104	GG05101140	1		RESISTOR 100 OHM J 1/4W
	00	M	R105	GD05104141	1		RESISTOR 100K OHM J 1/4W
	00	M	R106	GD05223141	1		RESISTOR 22K OHM J 1/4W
	00	M	R107	GD05472141	1		RESISTOR 4.7K OHM J 1/4W
	00	M	R108	GD05102141	1		RESISTOR 1K OHM J 1/4W
	00	M	R110	GG05101140	1		RESISTOR 100 OHM J 1/4W
	00	M	R111	GD05103141	1		RESISTOR 10K OHM J 1/4W
	00	M	R112	GD05103141	1		RESISTOR 10K OHM J 1/4W
	00	M	R113	GD05272141	1		RESISTOR 2.7K OHM J 1/4W
	00	M	R114	GD05331141	1		RESISTOR 330 OHM J 1/4W
	00	M	R115	GD05153141	1		RESISTOR 15K OHM J 1/4W
	00	M	R116	GD05272141	1		RESISTOR 2.7K OHM J 1/4W
	00	M	R117	GD05331141	1		RESISTOR 330 OHM J 1/4W
	00	M	R118	GD05102141	1		RESISTOR 1K OHM J 1/4W
	00	M	R119	GG05101140	1		RESISTOR 100 OHM J 1/4W

ENGINEERING PART LIST

ITEM	H	ORDER	101H	BRAND	MZ	ORDER NAME	SR7000G	REGISTER DATE	79-12
BLOCK NO.	HTUA1200	DESCRIPTION	1 TUNER & PHONO AMP. ASSY.						PAGE

P000000000(00)	P000000002(00)	M-SPEC (SL) QTY	

FA GD	LOT	ODN CCS	SYM.NO.	PART CODE	Q T Y	K T S	PART NAME / NOTICE
	00	N	R120	GD05331141	1		RESISTOR 330 OHM J 1/4W
	00	N	R121	GD05473141	1		RESISTOR 47K OHM J 1/4W
	00	N	R122	GD05123141	1		RESISTOR 12K OHM J 1/4W
	00	N	R123	GD05103141	1		RESISTOR 10K OHM J 1/4W
	00	N	R124	GD05103141	1		RESISTOR 10K OHM J 1/4W
	00	N	R125	GD05183141	1		RESISTOR 18K OHM J 1/4W
	00	N	R126	GD05332141	1		RESISTOR 3.3K OHM J 1/4W
	03	N	R127	GD05222140	1		RESISTOR 2.2K OHM J 0.25W
	00	N	R128	GD05103141	1		RESISTOR 10K OHM J 1/4W
	00	N	R129	GD05473141	1		RESISTOR 47K OHM J 1/4W
	00	N	R130	GD05821141	1		RESISTOR 820 OHM J 1/4W
	18	N	R131	RA01030800	1		TRIMMING RESIST 10K OHM MUTING LEVEL ADJ.
	00	N	R132	GD05474141	1		RESISTOR 470K OHM J 1/4W
	00	N	R133	GD05331141	1		RESISTOR 330 OHM J 1/4W
	00	N	R140	GG05470140	1		RESISTOR 47 OHM J 1/4W
	00	N	R301	GD05224141	1		RESISTOR 220K OHM J 1/4W
	00	MN	R302	RA04720080	1		TRIMMING RESIST 4.7K OHM V.C.O. ADJ.
	00	N	R303	GD05153141	1		RESISTOR 15K OHM J 1/4W
	00	N	R304	GD05821141	1		RESISTOR 820 OHM J 1/4W
	00	N	R305	GD05102141	1		RESISTOR 1K OHM J 1/4W

ENGINEERING PART LIST

ITEM	H	ORDER	101H	BRAND	MZ	ORDER NAME	SR7000G	REGISTER DATE	79-12
BLOCK NO.	HTUA1200	DESCRIPTION	1 TUNER & PHONO AMP. ASSY.						PAGE

P000000000(00)	P000000002(00)	M-SPEC (SL) QTY

FA GD	LOT	ODN CCS	SYM NO.	PART CODE	Q T Y	K T S	PART NAME / NOTICE
	18	M	R306	RA05020800	1		TRIMMING RESIST 5K OHM PILOT CANCEL ADJ.
	00	M	R307	GD05103141	1		RESISTOR 10K OHM J 1/4W
	00	M	R308	GD05154141	1		RESISTOR 150K OHM J 1/4W
	00	M	R309	GD05473141	1		RESISTOR 47K OHM J 1/4W
	00	M	R310	GD05102141	1		RESISTOR 1K OHM J 1/4W
	00	M	R311	GD05473141	1		RESISTOR 47K OHM J 1/4W
	00	M	R312	GG05470140	1		RESISTOR 47 OHM J 1/4W
	00	M	R313	GD05472141	1		RESISTOR 4.7K OHM J 1/4W
	00	M	R314	GD05472141	1		RESISTOR 4.7K OHM J 1/4W
	00	M	R315	GD05472141	1		RESISTOR 4.7K OHM J 1/4W
	00	M	R316	GD05472141	1		RESISTOR 4.7K OHM J 1/4W
	00	M	R317	GD05273141	1		RESISTOR 27K OHM J 1/4W
	00	M	R318	GD05273141	1		RESISTOR 27K OHM J 1/4W
	00	M	R319	GD05224141	1		RESISTOR 220K OHM J 1/4W
	00	M	R320	GD05224141	1		RESISTOR 220K OHM J 1/4W
	00	M	R321	GD05155141	1		RESISTOR 1.5M OHM J 1/4W
	00	M	R322	GD05155141	1		RESISTOR 1.5M OHM J 1/4W
	00	M	R325	GD05102141	1		RESISTOR 1K OHM J 1/4W
	18	M	R326	RA01030800	1		TRIMMING RESIST 10K OHM SEPARATION ADJ.
	00	M	R327	GD05103141	1		RESISTOR 10K OHM J 1/4W

ENGINEERING PART LIST

ITEM	H	ORDER	101H	BRAND	MZ	ORDER NAME	SR7000G	REGISTER DATE	79-12
BLOCK NO.	HTUA1200	DESCRIPTION	1 TUNER & PHONO AMP. ASSY.						PAGE

M-SPEC (SL) QTY

P000000000(00)	P000000002(00)		

FA GD	LOT	ODN CCS	SYM.NO.	PART CODE	Q T Y	K T S	PART NAME / NOTICE
	00	M	R328	GD05103141	1		RESISTOR 10K OHM J 1/4W
	00	M	R329	GD05471141	1		RESISTOR 470 OHM J 1/4W
	00	M	R330	GD05471141	1		RESISTOR 470 OHM J 1/4W
	00	M	R333	GD05473141	1		RESISTOR 47K OHM J 1/4W
	00	M	R334	GD05473141	1		RESISTOR 47K OHM J 1/4W
	00	M	R335	GD05471141	1		RESISTOR 470 OHM J 1/4W
	00	M	R336	GD05471141	1		RESISTOR 470 OHM J 1/4W
	00	M	R337	GG05101140	1		RESISTOR 100 OHM J 1/4W
	00	M	R338	GD05473141	1		RESISTOR 47K OHM J 1/4W
	00	M	R339	GD05333141	1		RESISTOR 33K OHM J 1/4W
	00	M	R340	GD05274141	1		RESISTOR 270K OHM J 1/4W
	00	M	R341	GD05104141	1		RESISTOR 100K OHM J 1/4W
	00	M	R342	GD05103141	1		RESISTOR 10K OHM J 1/4W
	00	M	R343	GD05103141	1		RESISTOR 10K OHM J 1/4W
	00	M	R344	GD05103141	1		RESISTOR 10K OHM J 1/4W
	00	M	R401	GD05823141	1		RESISTOR 82K OHM J 1/4W
	00	M	R402	GD05823141	1		RESISTOR 82K OHM J 1/4W
	00	M	R403	GD05222141	1		RESISTOR 2.2K OHM J 1/4W
	00	M	R404	GD05222141	1		RESISTOR 2.2K OHM J 1/4W
	00	M	R405	GD05104141	1		RESISTOR 100K OHM J 1/4W

ENGINEERING PART LIST

ITEM	H	ORDER	101H	BRAND	MZ	ORDER NAME	SR7000G	REGISTER DATE	79-12
BLOCK NO.	HIUA1200	DESCRIPTION	1 TUNER & PHONO AMP. ASSY.					PAGE	

P000000000(00)	P000000002(00)	M-SPEC (SL) QTY

FA GD	LOT	ODN CCS	SYM.NO.	PART CODE	Q T Y	K T S	PART NAME / NOTICE
	00	M	R406	GD05104141	1		RESISTOR 100K OHM J 1/4W
	00	M	R407	GD05331141	1		RESISTOR 330 OHM J 0.25W
	00	M	R408	GD05331141	1		RESISTOR 330 OHM J 0.25W
	00	M	R409	GD05471141	1		RESISTOR 470 OHM J 1/4W
	00	M	R410	GD05471141	1		RESISTOR 470 OHM J 1/4W
	00	M	R411	GD05393141	1		RESISTOR 39K OHM J 1/4W
	00	M	R412	GD05393141	1		RESISTOR 39K OHM J 1/4W
	00	M	R413	GD05474141	1		RESISTOR 470K OHM J 1/4W
	00	M	R414	GD05474141	1		RESISTOR 470K OHM J 1/4W
	00	M	R415	GD05102141	1		RESISTOR 1K OHM J 1/4W
	00	M	R416	GD05102141	1		RESISTOR 1K OHM J 1/4W
	00	M	R417	GD05221141	1		RESISTOR 220 OHM J 1/4W
	00	M	R418	GD05221141	1		RESISTOR 220 OHM J 1/4W
	00	M	R419	GD05104141	1		RESISTOR 100K OHM J 1/4W
	00	M	R420	GD05104141	1		RESISTOR 100K OHM J 1/4W
	00	M	R421	GD05330141	1		RESISTOR 33 OHM J 0.25W
	00	M	R422	GD05330141	1		RESISTOR 33 OHM J 0.25W
	00	MS	SV02	SS04060010	1	62.02.	SLIDE SWITCH REC. MODE SW.
	00	DN	S012	SR00050010	1	62.01.	ROTARY SWITCH REC. MODE SW. WIRE
	00	M	201F	2259109040	3		SHIELD SHIELD

ENGINEERING PART LIST

ITEM	H	ORDER	101H	BRAND	MZ	ORDER NAME	SR7000G	REGISTER DATE	79-12
BLOCK NO.	HTUA1200		DESCRIPTION	1 TUNER & PHONO AMP. ASSY.					PAGE

M-SPEC (SL) QTY

P0000000001(00)	P0000000002(00)		

FA GD	LOT	ODN CCS	SYM NO.	PART CODE	Q T Y	K T S	PART NAME / NOTICE
	00	M	202F	2259109062	1		SHIELD OSC PLATE
	00	MN	203F	2112109012	1		SHIELD SHIELD
		SYM-CNT		262			

ENGINEERING PART LIST

ITEM	H	ORDER	101H	BRAND	MZ	ORDER NAME	SR7000G	REGISTER DATE	79-12-
BLOCK NO.	HTUA1205	DESCRIPTION	0 TUNER SUB FOR SR7000G(P)						PAGE

M-SPEC (SL) QTY

P000000000(00)	P000000002(00)			

FA GD	LOT	ODN CCS	SYM.NO.	PART CODE	Q T Y	K T S	PART NAME / NOTICE
	18	M	CA21	DD11070300	1		CERAMIC CAP. 7 PF +-0.5PF 50V
	00	M	C107	DD10050370	1		CERAMIC CAP. 5PF C 50V
	18	M	C146	DD11100370	1		CERAMIC CAP. 10 PF +-0.5PF 50V
	03	M	C309	EA22701630	1		ELECT CAP 220UF M 16V
	00	M	C313	DF15332300	1		FILM CAP. 3300 PF J 50V
	00	M	C314	DF15332300	1		FILM CAP. 3300 PF J 50V
	00	M	F101	FF11070050	1		CERAMIC FILTER SFE10.7MD-1
	00	M	F102	FF11070050	1		CERAMIC FILTER SFE10.7MD-1
	00	M	F103	FF11070050	1		CERAMIC FILTER SFE10.7MD-1
	~~00~~	~~XB~~	~~K501~~	~~SR9660140~~	~~1~~	~~61.~~	~~ROTARY SWITCH SELECTOR SW KIT~~
	00	M	Q107	HD20011050	1		DIODE 1S1555
	00	M	Q108	HD20011050	1		DIODE 1S1555
	00	M	RA04	GD05273140	1		RESISTOR 27K OHM J 0.25W
	00	M	R109	GD05183140	1		RESISTOR 18K OHM J 1/4W
	00	M	R134	GD05183140	1		RESISTOR 18K OHM J 1/4W
	00	M	R135	GD05123140	1		RESISTOR 12K OHM J 1/4W
	00	M	R136	GD05822140	1		RESISTOR 8.2K OHM J 1/4W
	00	M	R138	GD05123140	1		RESISTOR 12K OHM J 1/4W
	~~00~~	~~WH~~	~~R139~~	~~7566100IP0~~	~~1~~		~~JUMPER 10 MM JUMPER~~
	00	M	R323	GD05184140	1		RESISTOR 180K OHM J 0.25W

ENGINEERING PART LIST

ITEM	H	ORDER	101H	BRAND	MZ	ORDER NAME	SR7000G	REGISTER DATE	79-12
BLOCK NO.	HTUA1205	DESCRIPTION	O TUNER SUB FOR SR7000G(P)						PAGE

M-SPEC (SL) QTY

P000000000(00)	P000000002(00)		

FA GD	LOT	ODN CCS	SYM.NO.	PART CODE	Q T Y	K T S	PART NAME / NOTICE
	00	M	R324	GD05184140	1		RESISTOR 180K OHM J 0.25W
	00	M	R331	GD05472140	1		RESISTOR 4.7K OHM J 0.25W
	00	M	R332	GD05472140	1		RESISTOR 4.7K OHM J 0.25W
	00	M	SV01	SS06040030	1	61.02.	SLIDE SWITCH SELECTOR SW
	00	D	S011	SR00040030	1	61.01.	ROTARY SWITCH SELECTOR SW. WIRE
		SYM-CNT		25			

ENGINEERING PART LIST

ITEM	H	ORDER	101H	BRAND	MZ	ORDER NAME	SR7000G	REGISTER DATE	79-12
BLOCK NO.		HVRA1700		DESCRIPTION		0 VR ASSY.			PAGE

P000000000(00)	P000000002(00)		M-SPEC (SL) QTY

FA GD	LOT	ODN CCS	SYM.NO.	PART CODE	Q T Y	K T S	PART NAME / NOTICE
	00	XMN	PG00	WK101H0000	1	52.04.	P.W. BOARD VR ASSY. P.W.B. (94HB)
	00	DN	RG01	RQ02040030	1		VARIABLE RESIST VR.CONT.100K B BALANCE 200K W
	04	M	WG01	YU05220240	1		JUMPER LEAD VR INPUT LOUDNESS
	04	M	WG02	YU03120240	1		JUMPER LEAD TO TONE INPUT FROM VR OUTPUT
		SYM-CNT		4			

ENGINEERING PART LIST

ITEM	H	ORDER	101H	BRAND	MZ	ORDER NAME	SR7000G	REGISTER DATE	79-12
BLOCK NO.		101HAE00		DESCRIPTION		0 MISC PARTS FOR SR7000GPE			PAGE

M-SPEC (SL) QTY

P000000021(00)

FA GD	LOT	ODN CCS	SYM.NO.	PART CODE	Q T Y	K T S	PART NAME / NOTICE
	00	M	F001	FS10300010	1		FUSE 3A 250V(DENTORI)
	00	M	G001	BF10400030	1		CAP.COMP. 0.1 UF + 120 OHM 250V
	00	M	J001	YJ08000300	1		JACK FUSE HOLDER
	16	M	J021	YJ04000950	1		JACK AC OUTLET (UNSWITCHED)
	16	M	J022	YJ04000950	1		JACK AC OUTLET (SWITCHED)
	00	D	J091	BY05080020	1		VOLT.SELECT. VOLTAGE SELECTOR
	00	DN	L001	TS19615010	1		POWER TRANSF. FOR P VERSION
	00	D	L051	LF11000242	1		ANT COIL AM BAR ANT
	00	D	S001	SP01010290	1		PUSH SWITCH POWER SWITCH (DENTORI)
	00	D	W001	YC01800200	1		A.C.POWER CORD AC CORD
		SYM-CNT		10			

ENGINEERING PART LIST

ITEM	H	ORDER	101H	BRAND	MZ	ORDER NAME	SR7000G	REGISTER DATE	79-12
BLOCK NO.	101HAP00		DESCRIPTION	0 MISC PARTS FOR SR7000G				PAGE	

M-SPEC (SL) QTY

P000000000(00)

FA GD	LOT	ODN CCS	SYM.NO.	PART CODE	Q T Y	K T S	PART NAME / NOTICE
	04	MN	F001	FS10600600	1		FUSE 6A 250V (DENTORI)
	00	M	G001	BF10400030	1		CAP.COMP. 0.1 UF + 120 OHM 250V
	00	M	J001	YJ08000300	1		JACK FUSE HOLDER
	16	M	J021	YJ04000950	1		JACK AC OUTLET (UNSWITCHED)
	16	M	J022	YJ04000950	1		JACK AC OUTLET (SWITCHED)
	00	D	J091	BY05080020	1		VOLT.SELECT. VOLTAGE SELECTOR
	00	DN	L001	TS19615010	1		POWER TRANSF. FOR P VERSION
	00	D	L051	LF11000242	1		ANT COIL AM BAR ANT
	00	D	S001	SP01010290	1		PUSH SWITCH POWER SWITCH (DENTORI)
	01	D	W001	YC01800200	1		A.C.POWER CORD AC CORD
		SYM-CNT		10			

ENGINEERING PART LIST

ITEM	H	ORDER	101H	BRAND	MZ	ORDER NAME	SR7000G	REGISTER DATE	79-12
BLOCK NO.	101HAZ00		DESCRIPTION	0 MISC PARTS FOR P VERSION				PAGE	

P000000000(00)	P000000002(00)	M-SPEC (SL) QTY

FA GD	LOT	ODN CCS	SYM.NO.	PART CODE	Q T Y	K T S	PART NAME / NOTICE
	00	M	C001	DF17104520	1		FILM CAP. 0.1UF 200V
	00	DN	C002	EE10907110	1		ELECT CAP 10000 UF M X2 71V
	00	M	J011	YT03040170	1		TERMINAL SPK TERMINAL (SYSTEM-1)
	00	M	J012	YT03040170	1		TERMINAL SPK TERMINAL (SYSTEM-2)
	00	M	J031	YL03010250	1		TERMINAL GROUND TERMINAL
	00	M	J041	YJ06001050	1		JACK 5P SOCKET
	00	M	J042	YJ06001050	1		JACK 5P SOCKET
	00	M	J043	YJ06001040	1		JACK 3P SOCKET
	00	M	Q001	HE20001290	1		DIODE S5VB40
	01	M	R001	GS10222030	1		RESISTOR 2.2KOHM K 3W
	01	M	R002	GS10222030	1		RESISTOR 2.2KOHM K 3W
		SYM-CNT		11			

ENGINEERING PART LIST

ITEM	H	ORDER	101H	BRAND	MZ	ORDER NAME	SR7000G	REGISTER DATE	79-12
BLOCK NO.	101HBP00		DESCRIPTION	0 SR7000G FRONT PANEL APPEARANCE				PAGE	

M-SPEC (SL) QTY

P000000000(00)	P000000002(00)		

FA GD	LOT	ODN CCS	SYM.NO.	PART CODE	Q T Y	K T S	PART NAME / NOTICE
	00	MN	001B	2112158110	1		WINDOW FOR FRONT PANEL (DIAL)
	00	MN	002B	2112158120	1		WINDOW FOR FRONT PANEL (METER)
	00	DN	003B	101H063010	1		ESCUTCHEON FRONT PANEL SR7000G (PX)
	00	M	004B	2112063140	2		ESCUTCHEON PANEL SIDE WOOD
	00	M	005B	2112160020	1		BRACKET PANEL + SIDE WOOD (R)
	00	M	006B	2112160030	1		BRACKET PANEL + SIDE WOOD (L)
	18	M	007B	51400310A0	4		B.H. TAP. SCREW BRACKET + WOOD
	00	M	008B	5128030880	2		B.H. TAP. SCREW BRACKET + PANEL (TOP)
	00	M	009B	5128030880	2		B.H. TAP. SCREW BRACKET + PANEL (BOTTOM)
	06	MN	012B	2112303212	1		MASK FOR DIAL (MZ GOLD NO2)
	00	M	013B	2276005050	2		CLAMPER MASK + PANEL
	00	D	016B	2112154010	10		KNOB PUSH SW
	10	MN	017B	2112115012	10		SPRING PUSH SW (MOLD)
	02	MN	019B	2112259033	10		BUSHING FOR PUSH SW
	15	DN	025B	2112154222	2		KNOB D=24 (MZ GOLD NO2) SINGLE
	15	DN	032B	2116154112	3		KNOB D=18 (MZ GOLD NO2) SINGLE
	15	DN	033B	2112154232	1		KNOB D=24 (MZ GOLD NO2) DOUBLE
	00	DN	034B	2112154240	1		KNOB D=32 (MZ GOLD NO2) DOUBLE
	00	M	040B	51100308A9	2		B.H.M. SCREW FRONT PANEL + SIDE BRACKET
	00	M	041B	5128030880	3		B.H. TAP. SCREW DOWN
		SYM-CNT		29			

ENGINEERING PART LIST

ITEM	H	ORDER	101H	BRAND	MZ	ORDER NAME	SR7000G	REGISTER DATE	79-12
BLOCK NO.		101HEP00		DESCRIPTION		0 SR7000G (P) REAR PANEL			PAGE

M-SPEC (SL) QTY

P000000000(00)	P000000002(00)		

FA GD	LOT	ODN COS	SYM.NO.	PART CODE	Q T Y	K T S	PART NAME / NOTICE
	12	DN	001E	101H160253	1		BRACKET SR7000G (PX) REAR PANEL
	13	M	002E	5129031000	1		B.T.SCREW(W/TL) REAR PANEL + STAY (LEFT)
	13	M	003E	5128030800	3		B.H. TAP. SCREW REAR PANEL + STAY
	00	M	004E	5128030800	4		B.H. TAP. SCREW FOR SPEAKERS
	00	M	005E	5128030800	4		B.H. TAP. SCREW REAR + HEAT SINK BRACKET
	00	M	006E	5128030800	8		B.H. TAP. SCREW FOR RCA & ANTENNA
	00	M	007E	5128031000	2		B.H. TAP. SCREW FOR VOLTAGE SELECTOR
	00	M	009E	1455259090	1		BUSHING FOR AC CORD
	00	M	011E	5128030800	2		B.H. TAP. SCREW REAR + TABLE (TRANSF.)
	14	MN	015E	101H120010	1		INSULATOR FOR RCA PIN
	15	WM	016E	9510911090	1		LABEL FTZ NO,LABEL
		SYM-CNT		11			

ENGINEERING PART LIST

ITEM	H	ORDER	101H	BRAND	MZ	ORDER NAME	SR7000G	REGISTER DATE	79-12
BLOCK NO.	101HFA00	DESCRIPTION	0 SR7000G CHASSIS					PAGE	

M-SPEC (SL) QTY

P000000000(00)	P000000002(00)		

FA GD	LOT	ODN CCS	SYM.NO.	PART CODE	Q T Y	K T S	PART NAME / NOTICE
	04	M	001F	2116126012	1		STAY STAY (L)
	00	MN	002F	2116126020	1		STAY STAY (R)
	00	MN	003F	101H126010	1		STAY CENTER STAY
	00	M	005F	5128030880	4		B.H. TAP. SCREW STAY(L,R) + CENTER STAY
	08	M	011F	2112271013	1		HOLDER FOR BAR ANTENNA
	00	M	012F	1502271010	2		HOLDER FOR BAR ANTENNA
	00	M	014F	5126030880	2		B.T.SCREW(W/W) ANTENNA + HOLDER
	00	M	015F	5128030883	2		B.H. TAP. SCREW FOR HOLDER
	04	M	017F	2116160054	1		BRACKET SIDE BRACKET (R)
	04	M	018F	5128030880	1		B.H. TAP. SCREW STAY(R) + SIDE BRACKET(R)
	03	M	020F	5126030880	4		B.T.SCREW(W/W) FOR TUNER PWB TONE
	00	M	021F	2116056012	1		BUFFER FOR TUNER PWB
	02	M	023F	62030049W0	1		LUG ON TVNER PWB
	14	DN	031F	101H105012	1		CHASSIS TRANSF BRACKET
	11	M	032F	5148041059	4		F.WASHER SCREW FOR TRANSF
	00	M	034F	5128030880	4		B.H. TAP. SCREW FOR CONDENCER
	01	M	035F	5128030880	4		B.H. TAP. SCREW TABLE+CENTER STAY
	00	M	036F	5128030880	3		B.H. TAP. SCREW TABLE + CENTER STAY
	00	M	037F	2218271020	2		HOLDER FOR POWER SUPPLY PWB
	00	M	038F	202H267030	1		HEATSINK FOR POWER SUPPLY PWB

ENGINEERING PART LIST

ITEM	H	ORDER	101H	BRAND	MZ	ORDER NAME	SR7000G	REGISTER DATE	79-12
BLOCK NO.	101HFA00	DESCRIPTION	0 SR7000G CHASSIS						PAGE

M-SPEC (SL) QTY		
P000000000(00)	P000000002(00)	

FA GD	LOT	ODN CGS	SYM NO	PART CODE	Q T Y	K T S	PART NAME / NOTICE
	00	M	039F	5128030880	1		B.H. TAP. SCREW HOLDER 038F
	00	M	040F	2276005050	2		CLAMPER POWER SUPPLY PWB + 041F
	00	MN	041F	101H123010	1		CONTACTOR FOR DIORDE
	00	MN	042F	101H267020	1		HEATSINK FOR DIORDE
	11	M	043F	5128031580	1		B.H. TAP. SCREW FOR DIORDE
	00	M	044F	2886005020	1		CLAMPER ON MAIN CHASSIS(TRANSF SIDE)
	04	M	045F	2116160064	1		BRACKET SIDE BRACKET(L)
	04	M	046F	5128030880	1		B.H. TAP. SCREW STAY(L) + SIDE BRACKET(L)
	00	M	050F	62030039W0	1		LUG POWER SUPPLY PWB
	00	M	051F	5128030880	1		B.H. TAP. SCREW ON MAIN CHASSIS(FOR LUG)
	00	M	054F	2886005020	2		CLAMPER ON CENTER STAY
	01	M	056F	62030049W0	1		LUG FOR CONTACTOR
	01	M	057F	62030039W0	1		LUG FOR MAIN 3P
		SYM-CNT		33			

ENGINEERING PART LIST

ITEM	F	ORDER	101H	BRAND	MZ	ORDER NAME	SR7000G	REGISTER DATE	79-12
BLOCK NO.	101HGA00		DESCRIPTION		0 SR7000G FRONT CHASSIS			PAGE	

M-SPEC (SL) QTY

P000000000(00)	P000000002(00)		

FA GD	LOT	ODN CCS	SYM.NO.	PART CODE	Q T Y	K T S	PART NAME / NOTICE
	00	DN	001G	101H160010	1		BRACKET FRONT CHASSIS
	04	M	002G	5128030880	4		B.H. TAP. SCREW SIDE BRACKET(L,R) + CHASSIS
	00	M	005G	51100306A9	4		B.H.M. SCREW PUSH SW + FRONT CHASSIS
	00	M	007G	51100306A9	2		B.H.M. SCREW PUSH SW + FRONT CHASSIS
	00	M	009G	5128260580	4		B.H. TAP. SCREW STEREO LED + DIAL
	06	DN	012G	101H265012	1		INDICATOR FOR LED (AL=0.8)
	16	MN	013G	101H259012	1		BUSHING FOR LED
	15	M	014G	101H160024	1		BRACKET FOR POWER LED
	00	M	015G	5128030880	2		B.H. TAP. SCREW 014G + FRONT CHASSIS
	00	M	016G	2276005050	4		CLAMPER 014G (BRACKET) + LED PWB
	00	M	017G	2276005050	2		CLAMPER 012G (INDICATOR) + 014G
	00	MN	024G	2112160072	1		BRACKET FOR PULLEY BRACKET
	00	M	025G	5128030880	1		B.H. TAP. SCREW FOR BRACKET
		SYM-CNT		13			

ENGINEERING PART LIST

ITEM	F	ORDER	101H	BRAND	MZ	ORDER NAME	SR7000G	REGISTER DATE	79-12
BLOCK NO.	101HHA00	DESCRIPTION	0 SR7000G DIAL					PAGE	

M-SPEC (SL) QTY			
P000000000(00)	P000000002(00)		

FA GD	LOT	ODN CCS	SYM.NO.	PART CODE	Q T Y	K T S	PART NAME / NOTICE
	06	MN	001H	101H302012	1		DIAL FOR 7000G <PX>
	00	M	002H	51280308B0	4		B.H. TAP. SCREW DIAL + SIDE BRACKET(L,R)
	00	MN	005H	101H355010	1		LENS PROTECTOR & SPK SYSTEM
	00	MN	007H	101H355020	1		LENS FM STEREO
		SYM-CNT		4			

ENGINEERING PART LIST

ITEM	H	ORDER	101H	BRAND	MZ	ORDER NAME	SR7000G	REGISTER DATE	79-12
BLOCK NO.	101HIB00	DESCRIPTION	FLYWHEEL (ESCUTCHEON MZ GOLD NO2)					PAGE	

M-SPEC (SL) QTY

P000000000(00)	P000000002(00)		

FA GD	LOT	ODN CCS	SYM NO	PART CODE	Q T Y	K T S	PART NAME / NOTICE
	08	DN	0011	2219273015	1		FLYWHEEL JYRO TOUCH
	00	DN	0031	2112104500	1	01. .	RETAINER FLYWHEEL HOLDER
	~~00~~	~~XMN~~	~~0041~~	~~2112104010~~	~~1~~	~~01.01.~~	~~RETAINER~~
	~~08~~	~~XM~~	~~0051~~	~~2219106010~~	~~2~~	~~01.02.~~	~~BEARING~~
	~~00~~	~~XM~~	~~0061~~	~~2219106020~~	~~1~~	~~01.03.~~	~~BEARING~~
	06	MN	0081	2219112013	1		SHAFT TUNING PULLEY
	00	M	0091	2215353010	1		RING RUBBER LING
	00	M	0121	2219063230	2		ESCUTCHEON ON FLYWHEEL (MZ GOLD NO.2)
	06	M	0141	5169030609	3		SOCKET SCREW,HP SHFT + FLYWHEEL
	00	M	0161	5128030880	3		B.H. TAP. SCREW FLYWHEEL + CHASSIS
		SYM-CNT		10			

ENGINEERING PART LIST

ITEM	H	ORDER	101H	BRAND	MZ	ORDER NAME	SR7000G	REGISTER DATE	79-12
BLOCK NO.	101HLA00	DESCRIPTION	0 SR7000G HEAT-SINK					PAGE	

P000000000(00)	P000000002(00)	M-SPEC (SL) QTY

FA GD	LOT	OON CCS	SYM NO.	PART CODE	Q T Y	K T S	PART NAME / NOTICE
	16	M	001L	101H267013	1		HEATSINK FOR MAIN
	11	M	005L	5178031580	8		FIN NECK 8.T FOR POWER TRANSISTOR
	01	M	006L	5126031080	2		B.T.SCREW(W/W) FOR DIODE
	00	M	007L	2116160072	1		BRACKET HEAT SINK + REAR
	00	M	008L	5128030880	2		B.H. TAP. SCREW HEAT SINK + BRACKET
	00	M	010L	2276160040	1		BRACKET HEAT SINK + CENTER STAY
	00	M	011L	5128030880	2		B.H. TAP. SCREW BRACKET + HEAT SINK
	00	M	012L	5128030880	2		B.H. TAP. SCREW BRACKET + CENTER STAY
	00	M	014L	2112271020	1		HOLDER FOR POINTER LAMP WIRE
	00	MN	015L	2116272013	1		POLE FOR POINTER LAMP WIRE
	00	M	016L	5128030880	1		B.H. TAP. SCREW HEAT SINK +014L
	00	M	018L	2867160010	3		BRACKET MAIN HEAT-SI+K + MAIN PWB
	00	M	019L	5128030880	6		B.H. TAP. SCREW 018L + 001L
	00	M	020L	5110030649	6		B.H.M. SCREW MAIN PWB + 018L
	00	M	021L	2212267023	4		HEATSINK ON MAIN PWB
	03	M	022L	5130030880	4		P.H. TAP. SCREW MAIN PWB + 021L
	04	M	023L	5128030880	8		B.H. TAP. SCREW TR + 021L (HEAT-SINK)
	00	M	024L	2917267022	4		HEATSINK ON MAIN PWB
	00	M	025L	5110031049	4		B.H.M. SCREW TRANSISTOR + 024L
	00	M	026L	5311030349	4		HEXAGON NUT FOR 024L

ENGINEERING PART LIST

ITEM	H	ORDER	101H	BRAND	MZ	ORDER NAME	SR7000G	REGISTER DATE	79-12
BLOCK NO.	101HLA00	DESCRIPTION	0 SR7000G HEAT-SINK					PAGE	

P000000000(00)	P000000002(00)	M-SPEC (SL) QTY	

FA GD	LOT	ODN CCS	SYM.NO.	PART CODE	Q T Y	K T S	PART NAME / NOTICE
	01	M	028L	4220005030	2		CLAMPER FOR LEAD
	01	M	030L	5110031049	2		B.H.M. SCREW FOR HOLDER
	01	M	031L	53110303A9	2		HEXAGON NUT FOR HOLDER
	01	MN	032L	101H271010	1		HOLDER ON MAIN PWB (L)
	01	MN	033L	101H271020	1		HOLDER ON MAIN PWB (R)
	16	M	034L	59030805P0	4		WASHER FOR TRANSISTOR
		SYM-CNT		26			

ENGINEERING PART LIST

ITEM	H	ORDER	101H	BRAND	MZ	ORDER NAME	SR7000G	REGISTER DATE	79-12
BLOCK NO.	101HSE00	DESCRIPTION	0 SR7000G (E) PKG & INST.					PAGE	

P000000002(00)

M-SPEC (SL) QTY

FA GD	LOT	ODN CCS	SYM.NO.	PART CODE	Q T Y	K T S	PART NAME / NOTICE
	18	DN	002S	2112809014	1		CUSHION FOR FRONT
	18	DN	003S	2112809022	1		CUSHION FOR REAR
	00	WMN	004S	2918107260	1		SHEET FOR CASE
	13	DN	005S	9090909030	1		POLYETHY SHEET FOR SET
	00	WM	006S	9526019060	2		SERIAL NO CARD FOR E
	00	DN	007S	101H801112	1		PACKING CASE FOR PX OUT
	05	D	009S	2731821013	1		SILICAGEL FOR E
	00	DN	010S	101H851310	1		INSTRUCTIONS FOR PX
	06	DN	012S	101H851340	1		INSTRUCTIONS FLYSHEET
	05	WM	017S	2918107380	1		SHEET FOR AC CORD
	14	M	020S	2819056020	1		BUFFER FOR BAR ANT
		SYM-CNT		11			

ENGINEERING PART LIST

ITEM	H	ORDER	101H	BRAND	MZ	ORDER NAME	SR7000G	REGISTER DATE	79-12
BLOCK NO.	101HSP00		DESCRIPTION	0 SR7000G PACKAGE & INSTRUCTION				PAGE	

M-SPEC (SL) QTY

P000000001(00)

FA GD	LOT	ODN OCS	SYM.NO.	PART CODE	Q T Y	K T S	PART NAME / NOTICE
	18	DN	002S	2112809014	1		CUSHION FOR FRONT
	18	DN	003S	2112809022	1		CUSHION FOR REAR
	00	WMN	004S	2918107260	1		SHEET FOR CASE
	13	DN	005S	9090909030	1		POLYETHY SHEET FOR SET
	00	WM	006S	9526019050	3		SERIAL NO CARD SERIAL(WHITE)
	02	DN	007S	101H801112	1		PACKING CASE FOR PX OUT
	00	WDN	009S	2818854013	1		GUARANTEE CARD FOR PX
	00	DN	010S	101H851310	1		INSTRUCTIONS FOR PX
	00	DN	012S	101H851020	1		INSTRUCTIONS SPEC FLY SHEET
	05	WM	017S	2918107380	1		SHEET FOR AC CORD
	14	M	020S	2819056020	1		BUFFER FOR BAR ANT
	05	WDN	024S	9650000014	1		S. STATION CARD SERVICE STATION LIST FOR P
	05	MN	110S	101H118010	1		SPACER FOR FLY WHEEL YO
		SYM-CNT		13			

ENGINEERING PART LIST

ITEM	H	ORDER	101H	BRAND	MZ	ORDER NAME	SR7000G	REGISTER DATE	79-12
BLOCK NO.	21121A00		DESCRIPTION	RX DIAL STRINGS					PAGE

M-SPEC (SL) QTY

P000000000(00)	P000000002(00)		

FA GD	LOT	ODN CCS	SYM.NO.	PART CODE	Q T Y	K T S	PART NAME / NOTICE
	00	MN	0011	2112159010	1		DRUM DIAL DRUM
	00	MN	0021	2112115020	1		SPRING FOR DRUM
	00	WMS	0091	72040805A0	180		STRING D=0.4 DIAL CORD
	00	MN	0121	2112103012	1		POINTER DIAL POINTER
	04	MN	0131	2112103024	1		POINTER DIAL POINTER
	00	M	0161	2276262500	2	02. .	PULLEY FOR BRACKET ON DIAL
	~~00~~	~~XM~~	~~0171~~	~~2259112010~~	~~2~~	~~02.01.~~	~~SHAFT~~
	~~00~~	~~XM~~	~~0181~~	~~2276262010~~	~~2~~	~~02.02.~~	~~PULLEY~~
	~~00~~	~~XM~~	~~0191~~	~~2259112020~~	~~2~~	~~02.03.~~	~~SHAFT~~
	00	MN	0201	2112303033	1		MASK FOR POINTER
	00	M	0211	2276262500	2	02. .	PULLEY FOR SIDE BRACKET
	~~00~~	~~XM~~	~~0221~~	~~2259112010~~	~~2~~	~~02.01.~~	~~SHAFT~~
	~~00~~	~~XM~~	~~0231~~	~~2276262010~~	~~2~~	~~02.02.~~	~~PULLEY~~
	~~00~~	~~XM~~	~~0241~~	~~2259112020~~	~~2~~	~~02.03.~~	~~SHAFT~~
		SYM-CNT	14				

ENGINEERING PART LIST

ITEM	H	ORDER	101H	BRAND	MZ	ORDER NAME	SR7000G	REGISTER DATE	79-12
BLOCK NO.	2112RN00	DESCRIPTION	1 SR-2000 LABEL FOR N.A					PAGE	

M-SPEC (SL) QTY

P000000000(08)	P000000002(08)		

FA GD	LOT	ODN CCS	SYM NO.	PART CODE	Q T Y	K T S	PART NAME / NOTICE
	08	WM	001R	2578861012	1		LABEL ON BOTTOM COVER
	09	WMN	003R	2932861014	1		LABEL ON WOOD CASE SIDE
	08	WO	010R	2112265010	1		INDICATOR SERIAL LABEL
		SYM-CNT		3			

ENGINEERING PART LIST

ITEM	H	ORDER	101H	BRAND	MZ	ORDER NAME	SR7000G	REGISTER DATE	79-12
BLOCK NO.		2116DP00		DESCRIPTION		SR6000GP & SR7000GP TOP&BOTTOM			PAGE

M-SPEC (SL) QTY

P000000000(01)	P000000002(00)		

FA GD	LOT	ODN CCS	SYM.NO.	PART CODE	Q T Y	K T S	PART NAME / NOTICE
	01	M	002D	3906259010	4		BUSHING CASE + CHASSIS
	11	M	003D	51280415U0	4		B.H. TAP. SCREW CASE + CHASSIS
	07	DN	006D	2116257112	1		LID BOTTOM COVER
	04	M	007D	51280410B0	12		B.H. TAP. SCREW LID+CHASSIS
	14	M	008D	51280406B0	1		B.H. TAP. SCREW LID + CHASSIS
	01	D	010D	2259057012	4		LEG NIFCO
	05	DN	011D	2116064702	1	05.	CASE WOOD CASE K
~~01~~	~~25~~		~~012D~~	~~2116003010~~	~~1~~	~~35.01.~~	~~PUNCHED PLATE~~ ~~PUNCHED PLATE~~
		SYM-CNT		8			

ENGINEERING PART LIST

ITEM	H	ORDER	101H	BRAND	MZ	ORDER NAME	SR7000G	REGISTER DATE	79-12
BLOCK NO.	2213VA01		DESCRIPTION	O PX ACCESSORIES (PLUG ONLY)				PAGE	

M-SPEC (SL) QTY

P000000000(00)	P000000002(00)		

FA GD	LOT	ODN CCS	SYM.NO.	PART CODE	Q T Y	K T S	PART NAME / NOTICE
	00	M	901V	YJ04000240	1		JACK SOCKET
		SYM-CNT		1			

ENGINEERING PART LIST

ITEM	H	ORDER	101H	BRAND	MZ	ORDER NAME	SR7000G	REGISTER DATE	79-1.
BLOCK NO.	2219VA00		DESCRIPTION	0 M2500 ACCESSORIES					PAGE

P000000000(00)	P000000002(00)		M-SPEC (SL) QTY

FA GD	LOT	ODN CCS	SYM.NO.	PART CODE	Q T Y	K T S	PART NAME / NOTICE
	00	D	001V	ZA02000070	1		EXT. ANTENNA FM ANT.
		SYM-CNT		1			
		ELK-CNT		34		*SYM-CNT*	956

手配仕様適用番号 No. 043

改版	シンボル	部品番号	数量	備考(CR加工)	手配	設変
	K700	ⅢK101H1000	1			
	P700	ⅢK101H10A0	X	メイン基板		
	P800	ⅢK101H00B0	X	電源基板		
	PS00	ⅢK101H00C0	X	プッシュスイッチ基板		
	PG00	ⅢK101H00D0	X	ボリューム基板		
	PE00	ⅢK101H00E0	X	トーンアンプ基板		
	PW00	ⅢK101H00F0	X	ヘッドホーンジャック基板		
	PT00	ⅢK101H00G0	X	スピーカースイッチ基板		
	PY50	ⅢK101H00H0	X	セレクターLED基板		
	PY00	ⅢK101H00I0	X	SRK LED基板		

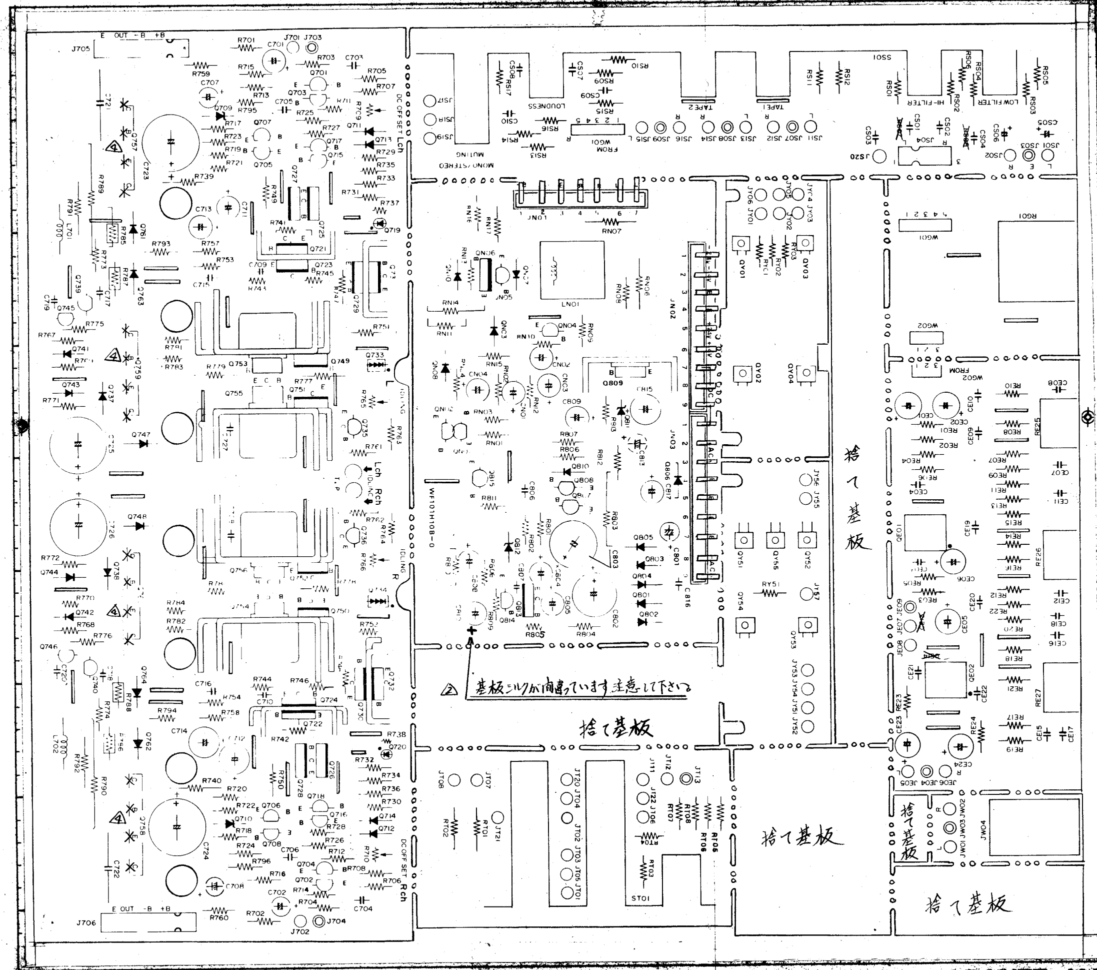

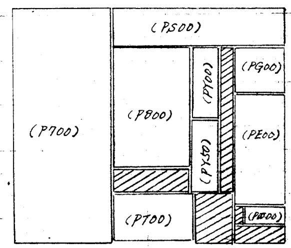

No.	線種	色	加工番号	使用個所

REVISION

△4 81-5-7
P900基板の5%n ジャンパー16本削除 (Q757~Q760の所)
1440T31

△3 80-6-28
向合加(0446T31)

発行 81.5.8 工技課

作業名	K700基板		
ORDER NAME	SR7000G	仕向	P.E
DATE	80-3-18	担当	承認

作業指図書 1/10

MARANTZ JAPAN, INC.

作業コード 101HH0202

BH1F-WT

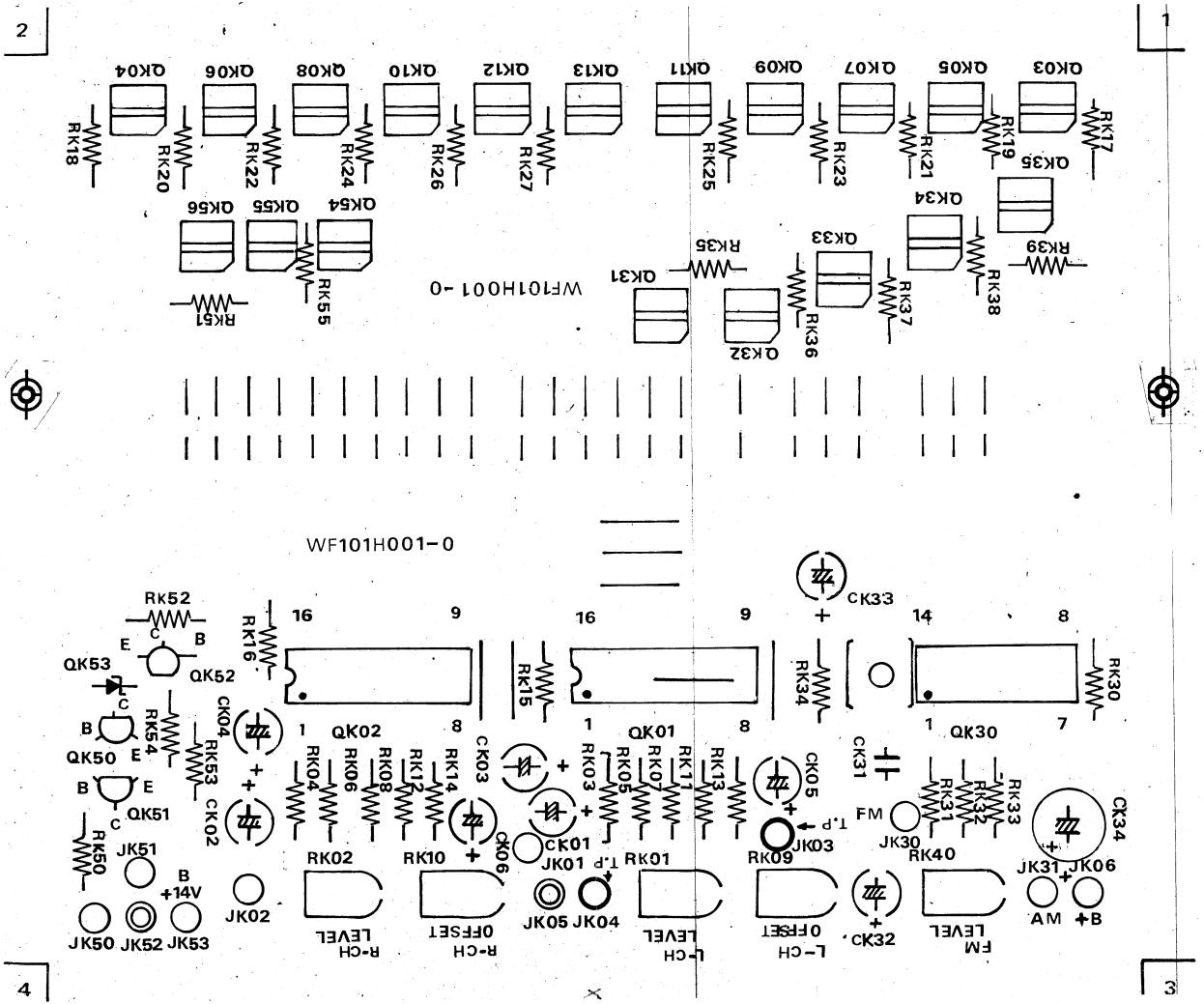
WF101H001-0
WF101H001-0
RK52
QK53
QK52
QK50
QK51
RK54
RK53
RK50
JK51
JK50
JK52
JK53
B
+14V
JK02
CK04
CK02
RK16
QK02
RK04
RK06
RK08
RK12
RK14
CK03
RK02
RK10
CK06
R-CH
LEVEL
R-CH
OFFSET
RK15
QK01
RK03
RK05
RK07
RK11
RK13
CK01
JK01
T.P
JK05
JK04
RK01
L-CH
LEVEL
L-CH
OFFSET
CK33
RK34
CK05
T.P
RK09
JK03
CK32
QK30
RK30
CK31
FM
JK30
RK31
RK32
RK33
RK40
FM
LEVEL
CK34
JK31
JK06
AM
+B
QK04
QK06
QK08
QK10
QK12
QK13
QK11
QK09
QK07
QK05
QK03
RK18
RK20
RK22
RK24
RK26
RK27
RK25
RK23
RK21
RK19
RK17
QK54
QK55
QK56
RK55
RK51
QK31
QK32
QK33
QK34
QK35
RK35
RK36
RK37
RK38
RK39

(PK00) WF101H0010 LED METER P.W.B.

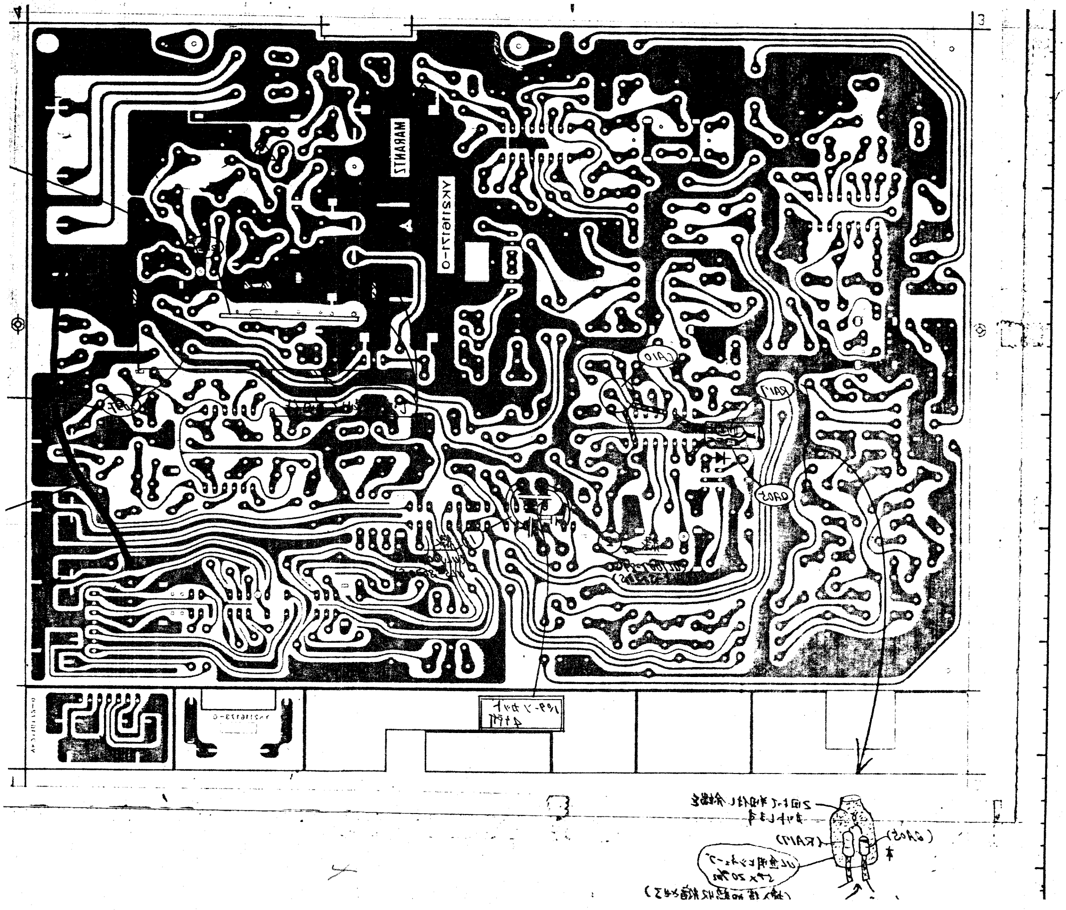
MARANTZ
YK2116171-0
YK2116173-0
CA10
RA17
QA05

⊗ SR 7000 G (353)

改版	シンボル	部品番号	数量	備考(CR加工)	手配	設変
Z	KP01	YK21161703	1			04
	P100	YK21161712	X	チューナー基板		
	PV00	YK21161720	X	RCAピンJ.基板		
	PZ00	YK21161730	X	指針ランプ基板		

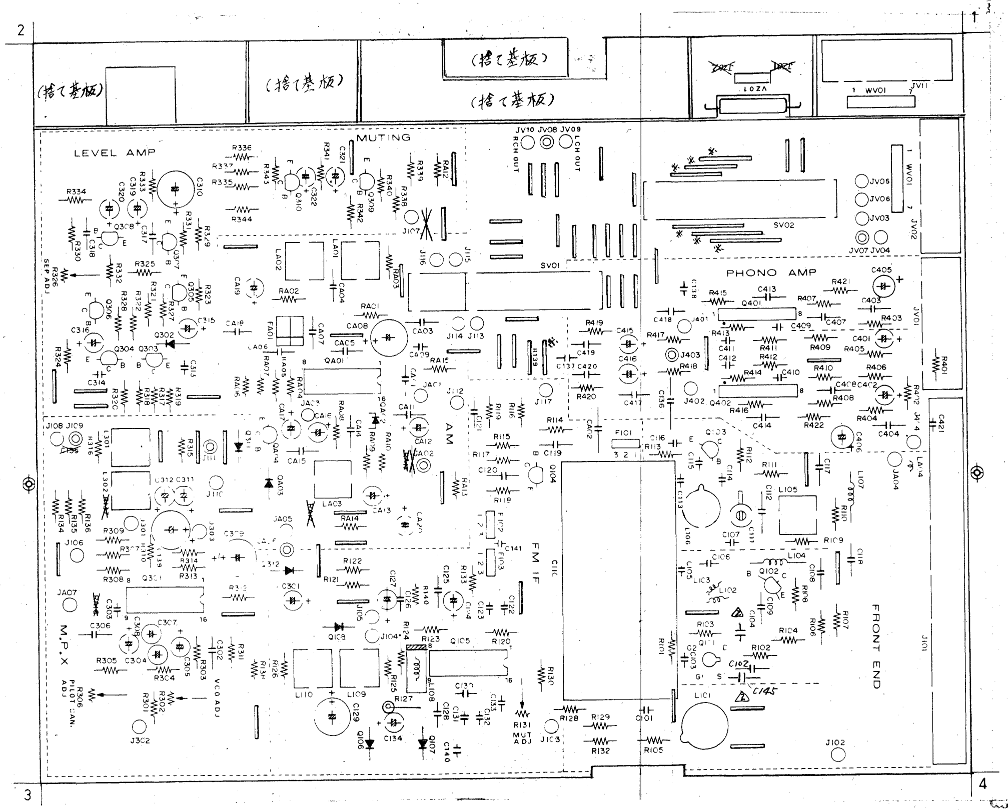

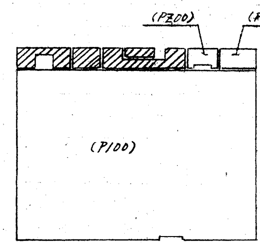

No.	線種	色	加工番号	使用個所

REVISION

△ 80-6-28
三笛真祖(04L07SN)
基板変更、C104.C145を
ウラ付から表付にする
04L4TSN 斎藤

発行	80-6-30
工技課	

作業名	(P100) チューナー基板		
ORDER NAME	SR7000G	仕向	P E
DATE	80-3-18	担当	承認

作業指図書 1/17

MARANTZ JAPAN, INC.

作業コード 1 0 1 HM 0 1 2 1

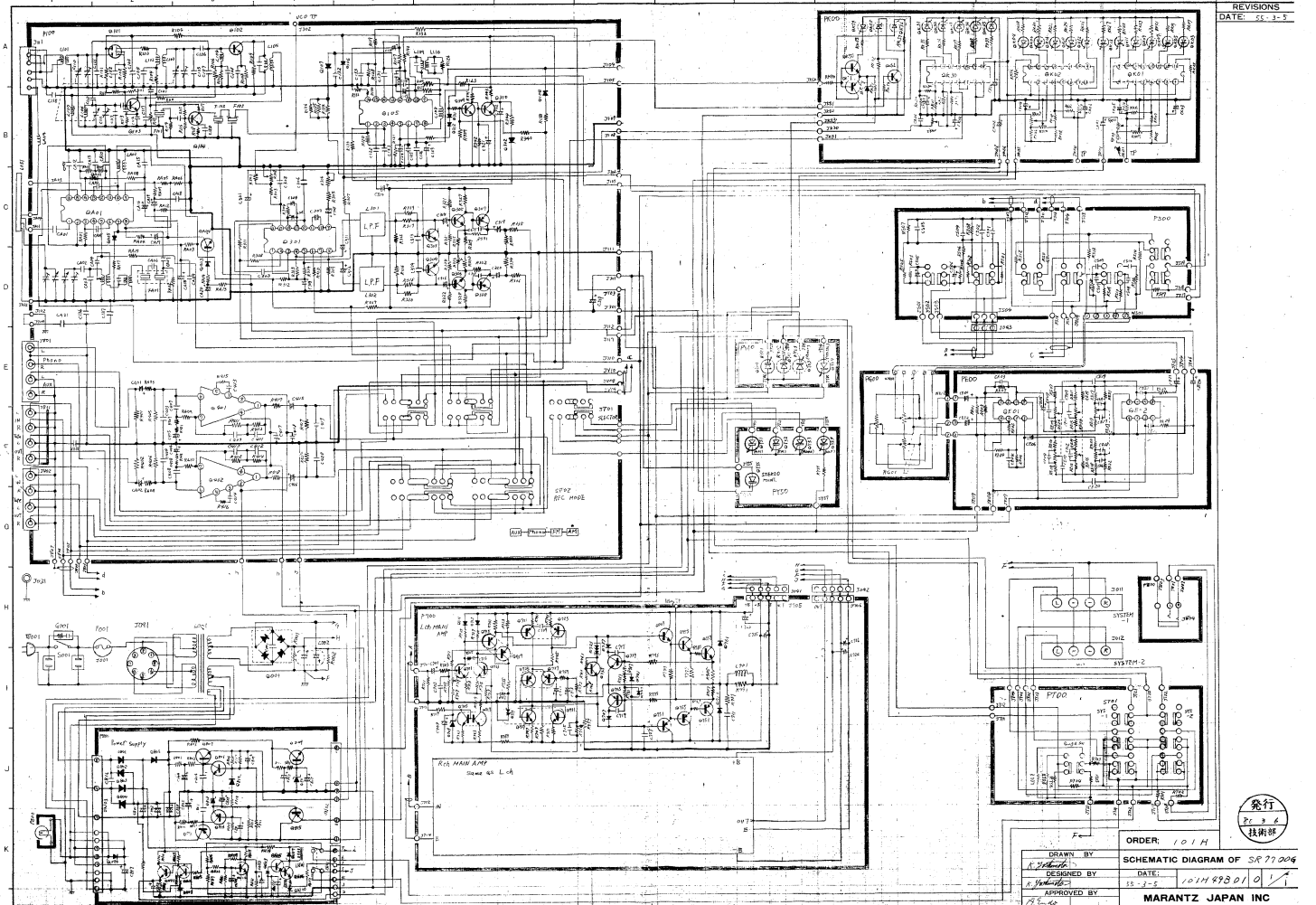
REVISIONS
DATE: 85-3-5
P109
P100
P200
P600
P700
P800
P900
P000
P300
P400
P500
P600
P700
P800
P900
PTDD
PFDD
PSDD
PMDD
PRDD
PVDD
PDDD
PBDD
PCDD
PEDD
PGDD
PHDD
PJDD
PKDD
PLDD
PMDD
PNDD
PODD
PQDD
PRDD
PSDD
PTDD
PUDD
PVDD
PWDD
PXDD
PYDD
PZDD
Rch MAIN AMP
Same as Lch
Lch MAIN AMP
Power Supply
SYSTEM-1
SYSTEM-2
ORDER: 101H
DRAWN BY
DESIGNED BY
APPROVED BY
SCHEMATIC DIAGRAM OF SR7700G
DATE: 85-3-5
101H9801 0 1/1
MARANTZ JAPAN INC
発行
Pc 3 6
技術部

REVISIONS
DATE: 55-3-5

P100 P200 P300 P400 P500 P600 P700 P800 PT00

Power Supply

Lch MAIN AMP

Rch MAIN AMP
Same as Lch

ST01 SLECTOR

ST02 RFC MODE

AUX Phono FM AM

STEREO POINT.

SYSTEM-1

SYSTEM-2

発行
8C 3 6
技術部

ORDER;	101H
DRAWN BY	K. Yoshimoto
DESIGNED BY	K. Yoshimoto
APPROVED BY	S. Endo
SCHEMATIC DIAGRAM OF	SR7700G
DATE:	55-3-5
	101H49801 0 1/1
	MARANTZ JAPAN INC

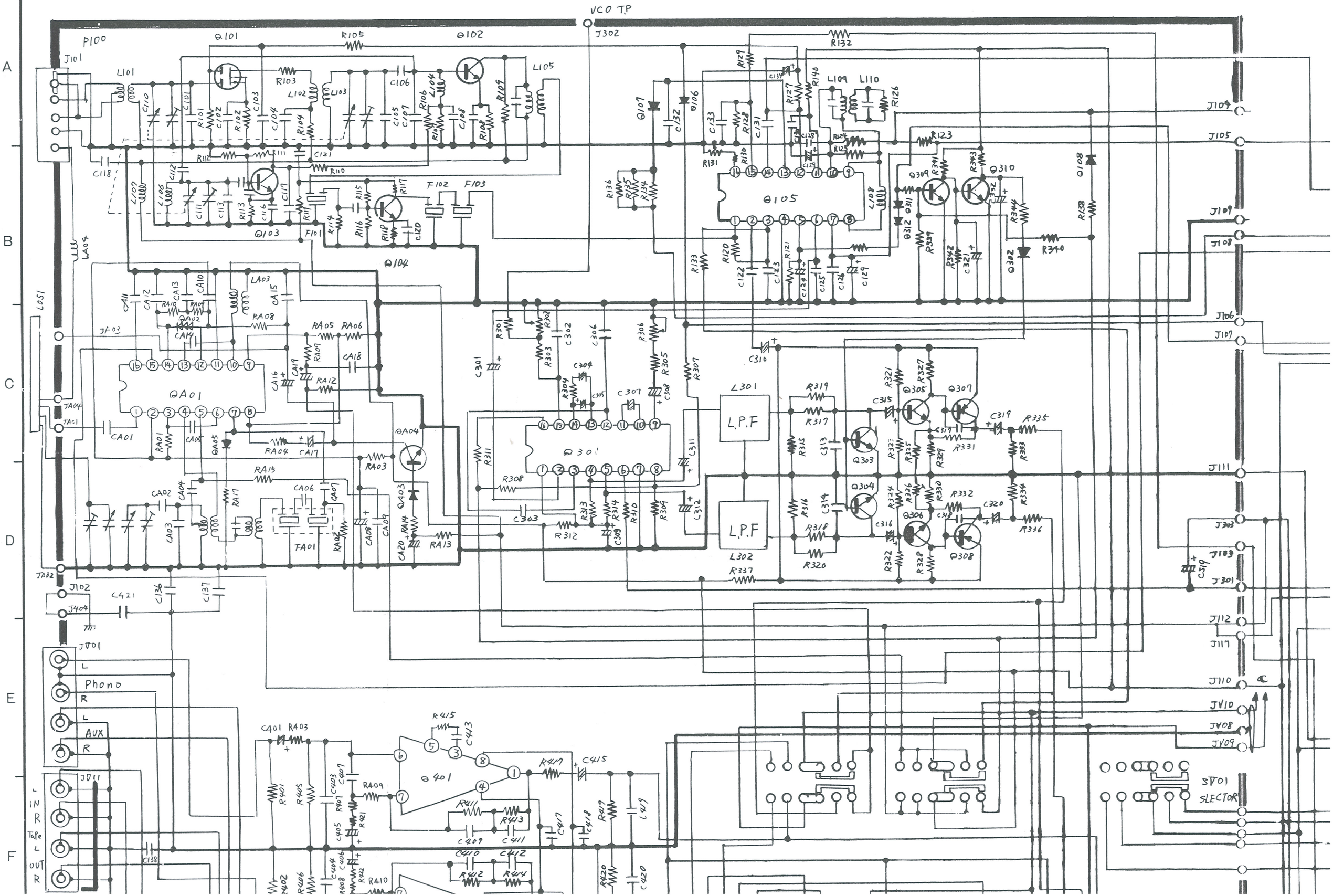
VCO T.P
P100
J101
J302
Q101
Q102
R105
R132
L101
L105
Q107
Q106
L109
L110
J104
J105
J109
J108
J106
J107
J111
J303
J103
J301
J112
J117
J110
JV10
JV08
JV09
ST01
SLECTOR
Q105
Q309
Q310
Q108
Q302
Q103
Q104
F102
F103
F101
LA04
LA03
LA05
LA02
LA01
QA01
QA02
QA03
QA04
QA05
FA01
Q301
L301
L302
L.P.F
L.P.F
Q303
Q304
Q305
Q306
Q307
Q308
J102
J404
J401
Phono
L
R
AUX
R
J411
IN
Tape
OUT
Q401

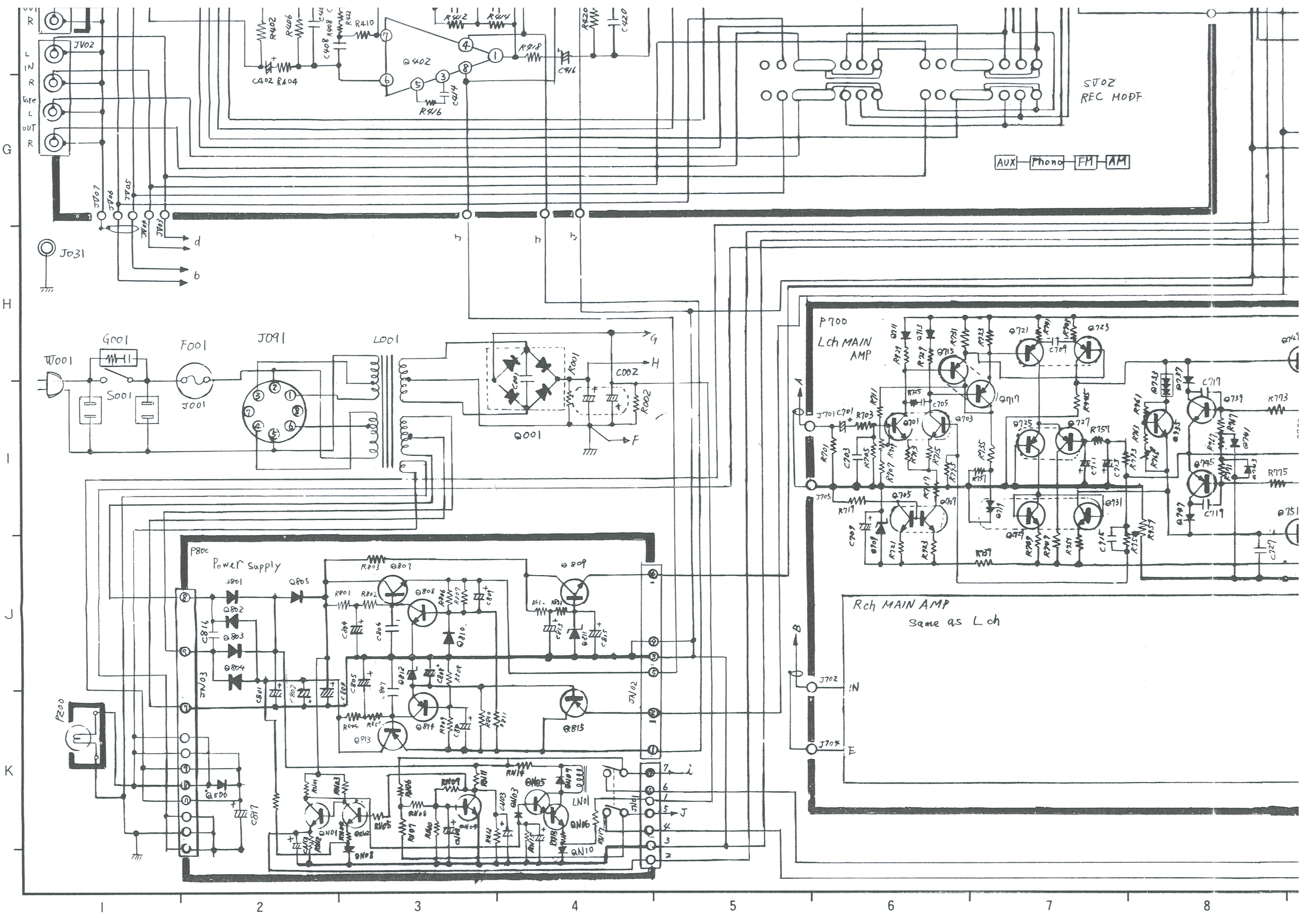
JV02
L IN R
Tape L OUT R
C402 R404
R402
R406
C408
R408
R410
Q402
R412
R414
R418
C416
R420
C420
C414
R416
SW02
REC MODE
AUX
Phono
FM
AM
JV07
JV06
JV05
JV04
JV03
J031
d
b
G001
W001
S001
F001
J001
J091
L001
Q001
C001
R001
C002
R002
G
H
F
P700
Lch MAIN AMP
J701
C701
R703
Q701
Q703
Q705
Q707
Q709
Q711
Q713
Q715
Q721
Q723
C709
C705
R719
C717
Q739
R773
Q735
Q727
R759
Q745
Q743
R775
Q731
Q751
C719
C727
R739
R737
C715
R735
C713
C711
C707
Q717
Q719
R731
R733
R729
R727
R725
R723
R721
R707
R705
R703
R701
C703
A
B
Rch MAIN AMP
Same as Lch
J702
IN
J704
E
P800
Power Supply
PZ00
JV01
JV02
JV03
D801
Q802
Q803
Q804
Q805
Q806
C816
C817
C801
C802
C803
C804
C805
C806
C807
C808
C809
C810
C811
C812
C813
C814
C815
R801
R802
R803
R804
R805
R806
R807
R808
R809
R810
R811
R812
R813
R814
R815
R816
R817
R818
R819
R820
Q807
Q808
Q809
Q810
Q811
Q812
Q813
Q814
Q815
QN01
QN02
QN03
QN04
QN05
QN06
QN07
QN08
QN09
QN10
LN01
RN01
RN02
RN03
RN04
RN05
RN06
RN07
RN08
RN09
RN10
RN11
RN12
RN13
RN14
JN01
JN02
JN03
JN04
i
J
1
2
3
4
5
6
7
8

9 10 11 12 13 14 15

A B C D E F

REVISIONS	
DATE:	55-3-5

PK00

QK50 QK51 QK52 QK53 QK54 QK55 QK56 QK57

RK50 RK51 RK52 RK53 RK54 RK55

JK50 JK51 JK52 JK53 JK30 JK31

QK30 QK31 QK32 QK33 QK34 QK35

RK30 RK31 RK32 RK33 RK34 RK35 RK36 RK37 RK38 RK39 RK40

CK01 CK02 CK03

QK02 QK04 QK06 QK08 QK10 QK12

RK10 RK12 RK14 RK16 RK18 RK20 RK22 RK24 RK26

CK04 CK06

JK02 JK04 JK05 JK04 TP JK01 JK03 TP

QK01 QK03 QK05 QK07 QK09 QK11 QK13

RK01 RK03 RK05 RK07 RK09 RK11 RK13 RK15 RK17

CK05

PS00

RS01 RS02 RS03 RS04 RS05 RS06 RS07 RS08 RS09 RS10 RS11 RS12 RS13 RS14 RS15 RS16 RS17

CS01 CS02 CS03 CS04 CS05 CS06 CS07 CS08 CS09 CS10

JS01 JS02 JS03 JS04 JS05 JS06 JS07 JS08 JS09 JS10 JS11 JS12 JS13 JS14 JS15 JS16 JS17 JS18 JS19

J043 WS01

PY00

RY01 RY02 RY03 RY04

JY01 JY02 JY03 JY04 JY05 JY06 JY07 JY08

@Y01 @Y02 @Y03 (POWER) @Y04 (PHOTO)

JY51 JY52 JY53 JY54

@Y51 (AM) @Y52 (FM) @Y53 (Mono) @Y54 (AUX)

PG00 WG01 WG02

PE00

QE01 QE02

RE01 RE02 RE03 RE04 RE05 RE06 RE07 RE08 RE09 RE10 RE11 RE12 RE13 RE14 RE15 RE16 RE17 RE18 RE19 RE20 RE21 RE22 RE23 RE24

CE01 CE02 CE03 CE04 CE05 CE06 CE07 CE08 CE09 CE10 CE11 CE12 CE13 CE14 CE15 CE16 CE17 CE18 CE19 CE20 CE21 CE22 CE23 CE24

JE01 JE02 JE03 JE04 JE05 JE06

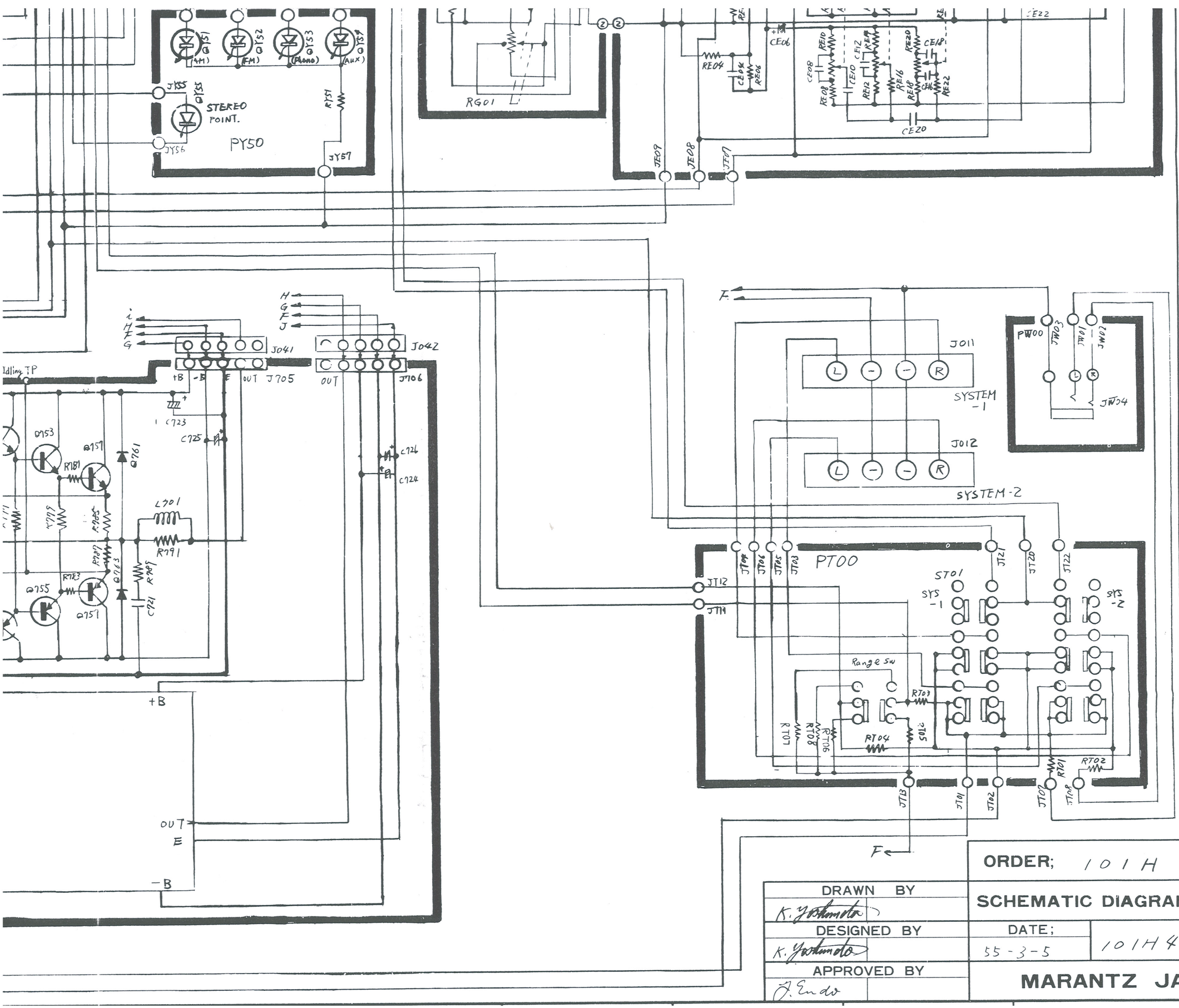

DRAWN BY	K. Yoshimoto	ORDER;	101H	発行 80 3 6 技術部
DESIGNED BY	K. Yoshimoto	SCHEMATIC DIAGRAM OF	SR7000G	
APPROVED BY	J. Endo	DATE; 55-3-5	101H49301	0 1/1
		MARANTZ JAPAN INC		